P-6736-2
21171
X1128

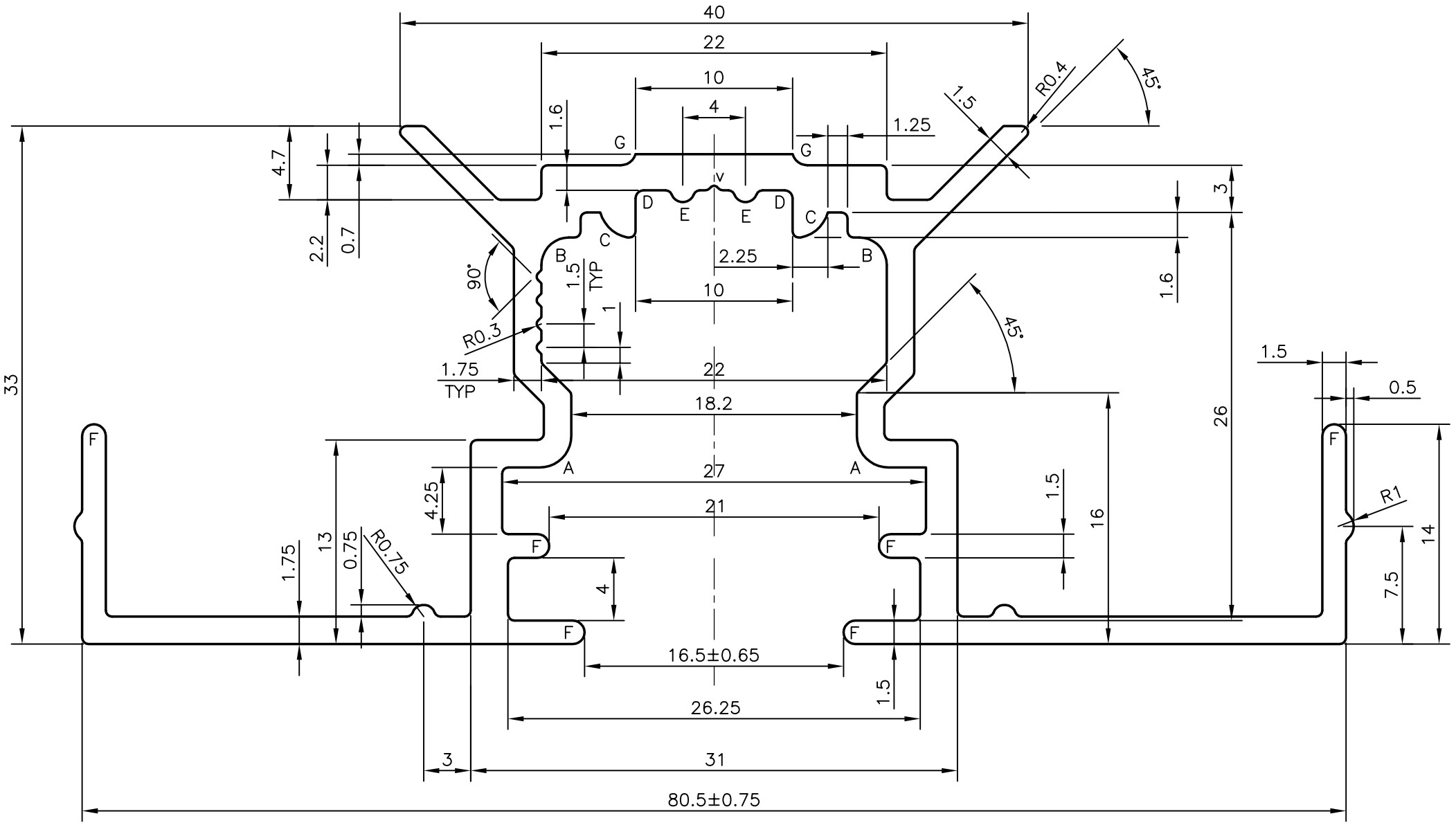

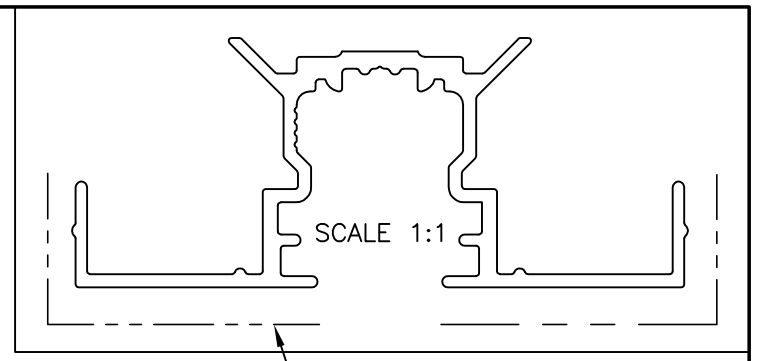

A = 2.00mm RADIUS (2 PLACES)
B = 1.75mm RADIUS (2 PLACES)
C = 2.25mm RADIUS (2 PLACES)
D = 0.50mm RADIUS (2 PLACES)
E = 0.75mm RADIUS (2 PLACES)
G = 1.00mm RADIUS (2 PLACES)
F = FULL RADIUS (6 PLACES)
V = VEE GROOVE 0.3 DEEPx90° (1 PLACE)

UNSPECIFIED WALL THICKNESS = 1.75mm
ALL UNSPECIFIED RADIUS TO BE 0.40mm

JINDAL
SYMBOL OF QUALITY
AN ISO 9001 COMPANY

JINDAL ALUMINIUM LTD.
BANGALORE-560073 (INDIA)

1. ALL DIMENSIONS ARE IN mm.
2. ROUND OFF ALL SHARP CORNERS WITH 0.40 mm.
3. TOLERANCES WILL BE AS PER EN12020-2:2001 UNLESS OTHERWISE SPECIFIED

		NAME	DATE
DRAWN		RAGHAVENDRA	20-11-2006
CHECKED			
APPROVED			

SCALE	3:1
AREA mm^2	379.577
PERIMETER mm.	401.663
WEIGHT kg/m	1.025

DRAWING No.	SECTION No.
P-6736-2	–
21171	21171
X1128	X1128

PARTY'S NAME	KOMFORT OFFICE ENVIRONMENTS PLC-U.K
PARTY'S DRAWING No.	D4/SJ8/0000 ISSUE-3
ALLOY & TEMPER	6063 TF
DESCRIPTION	GLAZING POCKET