P−9583
X1219

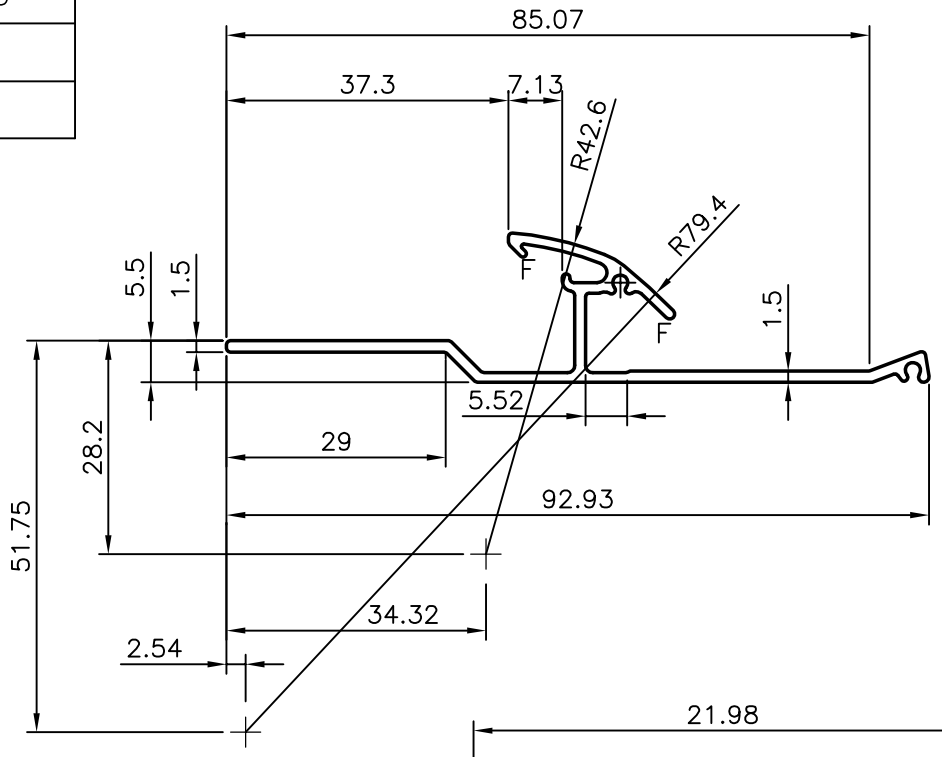

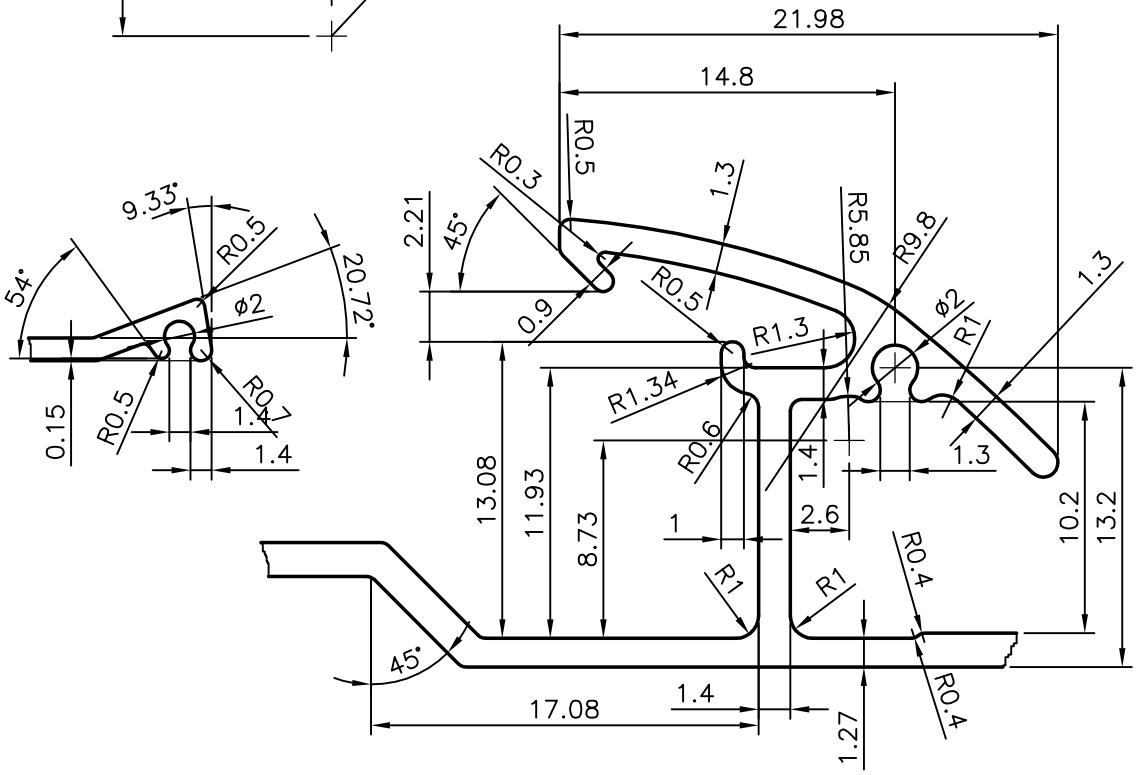

UNSPECIFIED RADII 0.5 mm
F = FULL RADIUS (2 PLACES)

			NAME	DATE
JINDAL SYMBOL OF QUALITY AN ISO 9001 COMPANY	*JINDAL ALUMINIUM LTD.* *BANGALORE−560073 (INDIA)*	DRAWN	J.P.KAUSHIK	22−10−2009
		CHECKED		
		APPROVED		

1. ALL DIMENSIONS ARE IN mm.
2. ROUND OFF ALL SHARP CORNERS WITH 0.50 mm.
3. TOLERANCES WILL BE AS PER IS:3965−1981 UNLESS OTHERWISE SPECIFIED

SCALE	1:1
AREA mm^2	204.089
PERIMETER mm.	290.085
WEIGHT kg/m	0.551

PARTY'S NAME	VOLVO BUSES INDIA PVT. LTD., BANGALORE
PARTY'S DRAWING No.	21323695
ALLOY & TEMPER	6060 T6
DESCRIPTION	TRANSPORT SECTION

DRAWING No.	SECTION No.
P−9583	−
X1219	X1219