P–9601	
X1227	

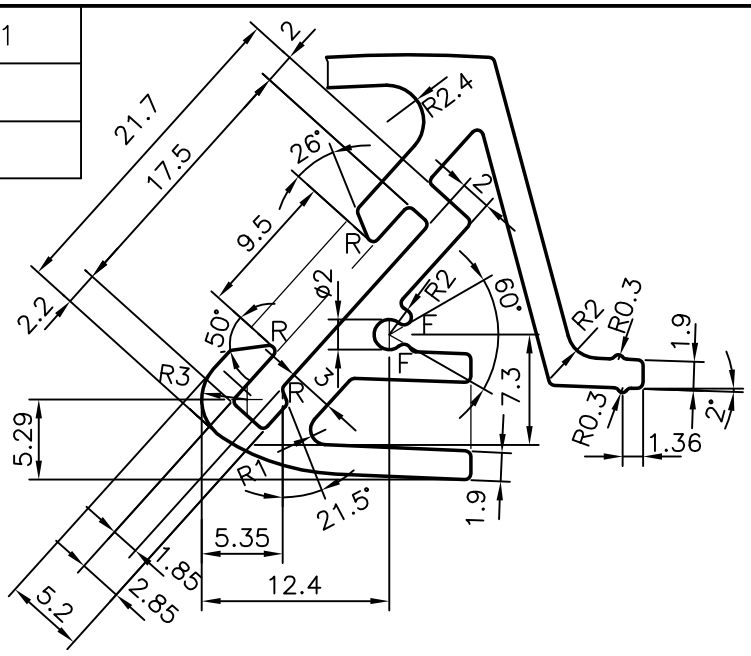

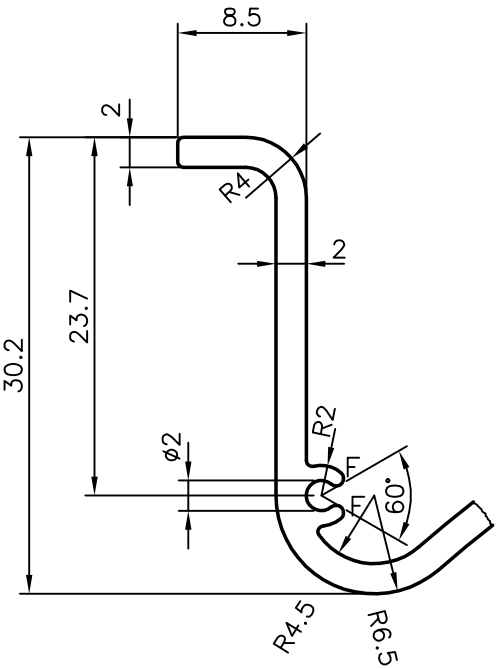

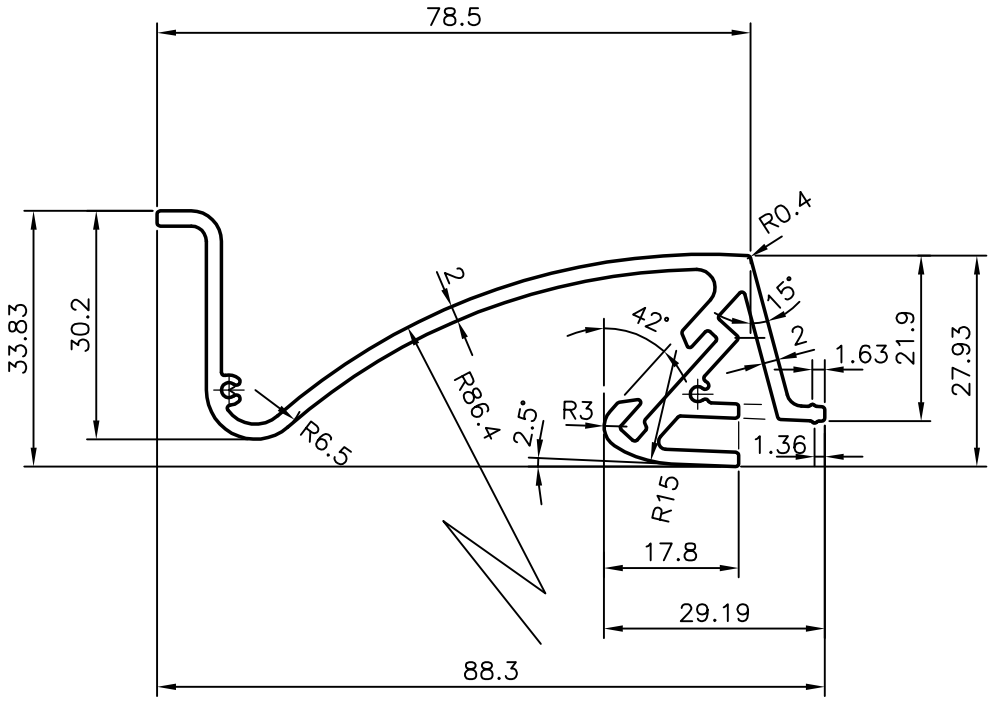

R = 0.4 RADIUS
F = FULL RADIUS (4 PLACES)

			NAME	DATE
JINDAL SYMBOL OF QUALITY AN ISO 9001 COMPANY	*JINDAL ALUMINIUM LTD.* *BANGALORE–560073 (INDIA)*	DRAWN	J.P.KAUSHIK	03–11–2009
		CHECKED		
		APPROVED		

1. ALL DIMENSIONS ARE IN mm.
2. ROUND OFF ALL SHARP CORNERS WITH 0.50 mm.
3. TOLERANCES WILL BE AS PER IS:3965–1981 UNLESS OTHERWISE SPECIFIED

SCALE	1:1
AREA mm^2	413.56
PERIMETER mm.	393.664
WEIGHT kg/m	1.117

PARTY'S NAME	VOLVO BUSES INDIA PVT. LTD., BANGALORE
PARTY'S DRAWING No.	21102581
ALLOY & TEMPER	6060 T6
DESCRIPTION	TRANSPORT SECTION

DRAWING No.	SECTION No.
P–9601	–
X1227	X1227