| |
|---|
| P−10091−1 |
| X1314 |
| |

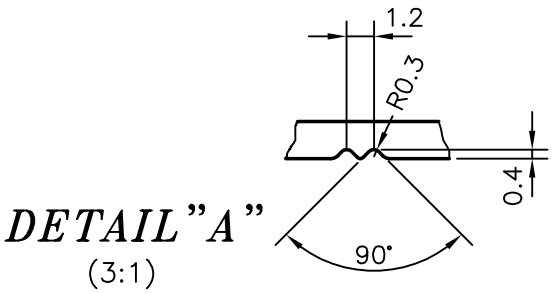


DETAIL"A"
(3:1)

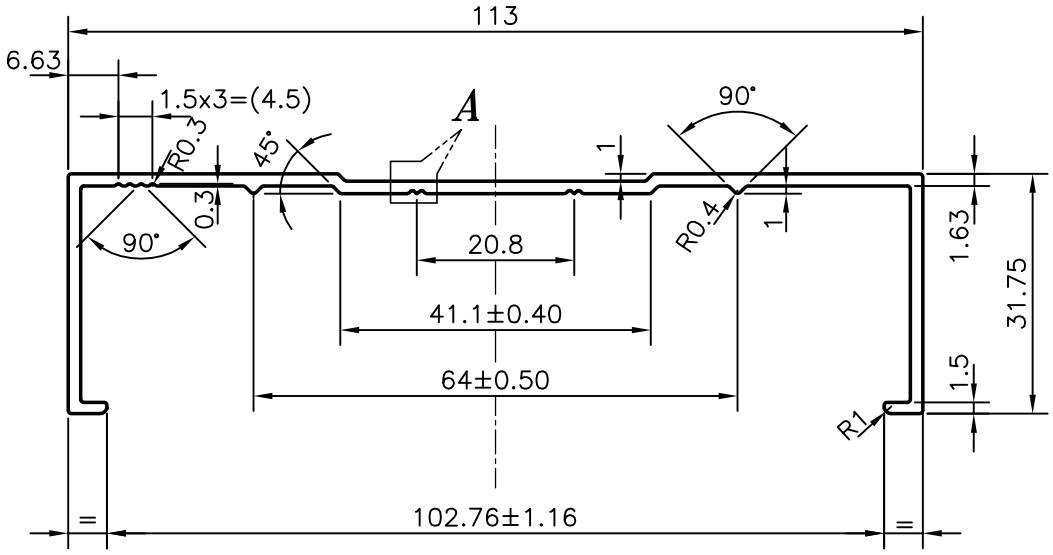


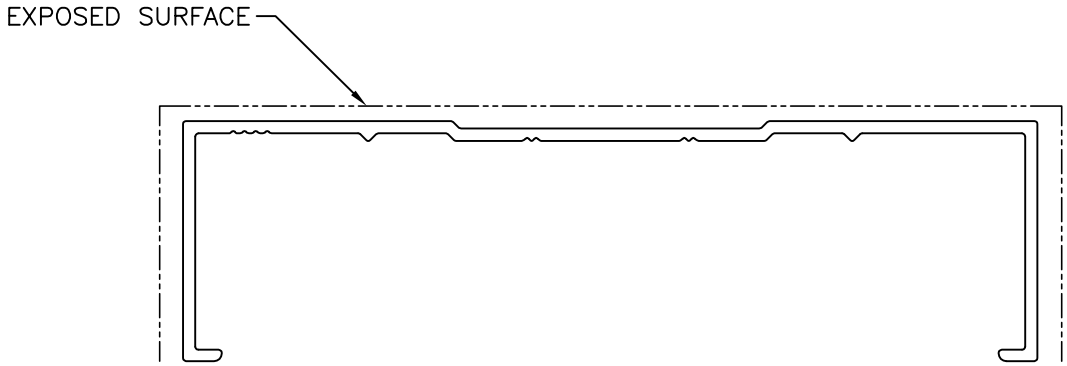


GENERAL WALL THICKNESS 1.65 mm

| | | | | |
|---|---|---|---|---|
| JINDAL<br>SYMBOL OF QUALITY<br>AN ISO 9001 COMPANY | *JINDAL ALUMINIUM LTD.*<br>*BANGALORE−560073 (INDIA)* | | NAME | DATE |
| | | DRAWN | J.P.KAUSHIK | 09−06−2010 |
| | | CHECKED | | |
| | | APPROVED | S.S.GARG | 15−06−2010 |
| 1. ALL DIMENSIONS ARE IN mm.<br>2. ROUND OFF ALL SHARP CORNERS WITH 0.40 mm.<br>3. TOLERANCES WILL BE AS PER BS:EN−755 UNLESS OTHERWISE SPECIFIED | | SCALE | | 1:1 |
| | | AREA $mm^2$ | | 294.657 |
| | | PERIMETER mm. | | 366.038 |
| PARTY'S NAME | KOMFORT OFFICE ENVIRONMENTS PLC., U.K. | WEIGHT kg/m | | 0.796 |
| | | DRAWING No. | | SECTION No. |
| PARTY'S DRAWING No. | TF411 | P−10091−1 | | |
| | | X1314 | | X1314 |
| ALLOY & TEMPER | 6063 T6 | | | |
| DESCRIPTION | 102mm HEAD CHANNEL SECTION | | | |