P-10385-1

X1362

DETAIL OF "B"
SCALE 3:1

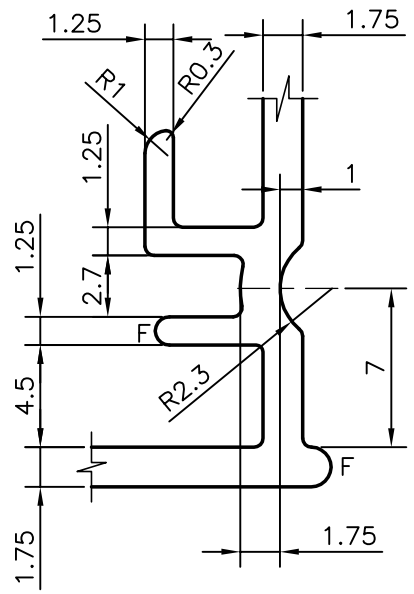

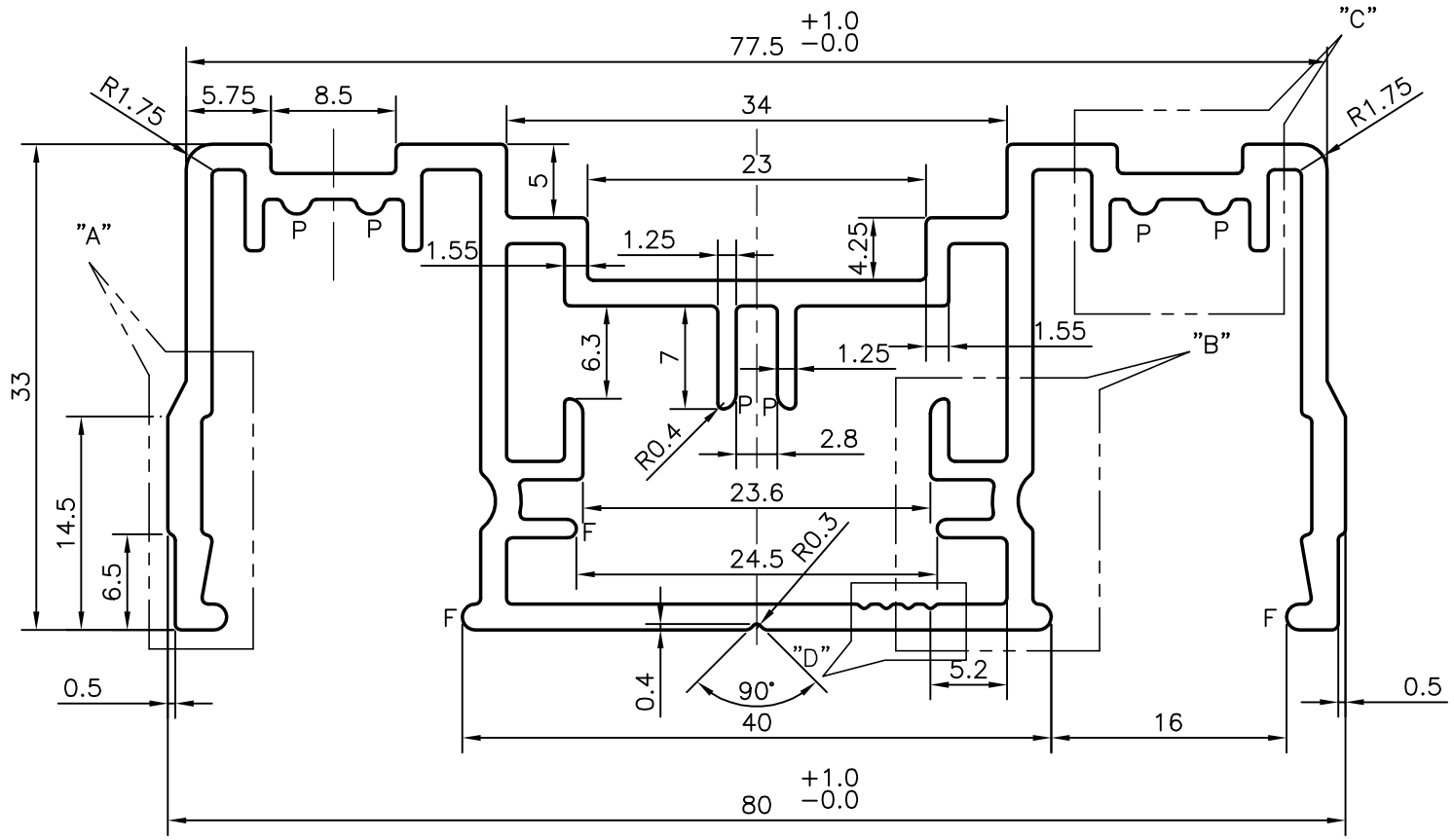

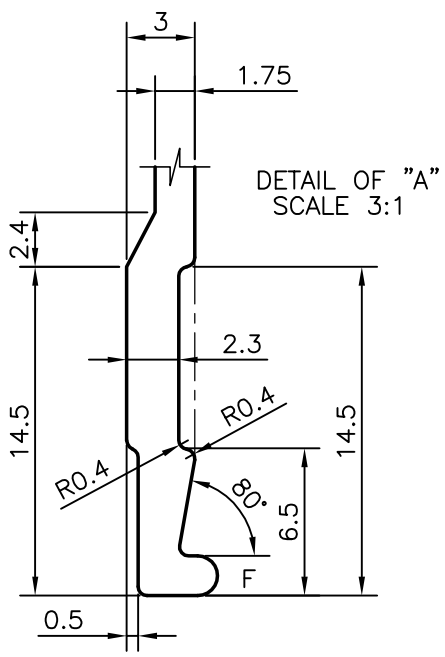

DETAIL OF "A"
SCALE 3:1

DETAIL OF "C"
SCALE 3:1

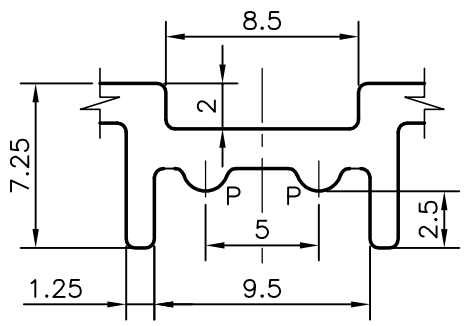

F = FULL RADIUS (6 PLACES)
P = R1.00 mm (6 PLACES)
UNSPECIFIED WALL THICKNESS = 1.75 mm

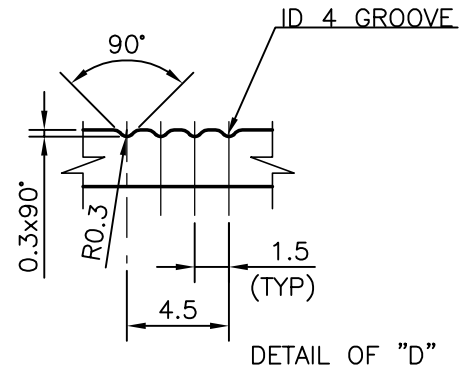

DETAIL OF "D"
SCALE 3:1

EXPOSED SURFACE

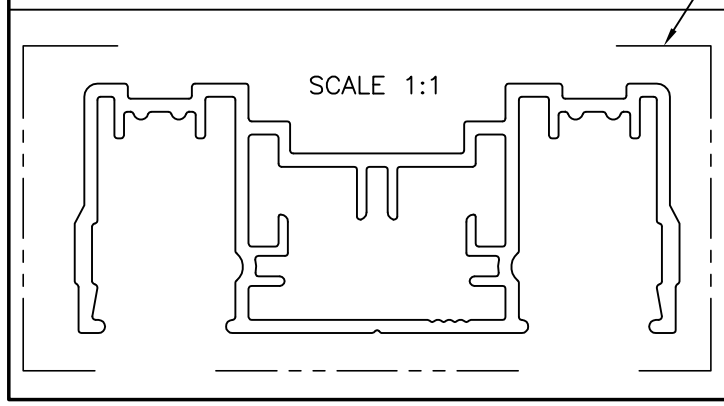

JINDAL SYMBOL OF QUALITY AN ISO 9001 COMPANY	*JINDAL ALUMINIUM LTD.* *BANGALORE-560073 (INDIA)*		NAME	DATE
		DRAWN	J.P.KAUSHIK	17-09-2010
		CHECKED		
		APPROVED	S.S.GARG	24-09-2010
1. ALL DIMENSIONS ARE IN mm. 2. ROUND OFF ALL SHARP CORNERS WITH 0.40 mm. 3. TOLERANCES WILL BE AS PER BS:EN-755 UNLESS OTHERWISE SPECIFIED		SCALE		2:1
		AREA mm^2		539.867
		PERIMETER mm.		416.333
		WEIGHT kg/m		1.458
PARTY'S NAME	KOMFORT OFFICE ENVIRONMENTS PLC., U.K.	DRAWING No.		SECTION No.
PARTY'S DRAWING No.	D4-DGP8-ISSUE-2	P-10385-1		–
ALLOY & TEMPER	6063 T6	X1362		X1362
DESCRIPTION	MISC. SECTION			