P-10344-2
X1387

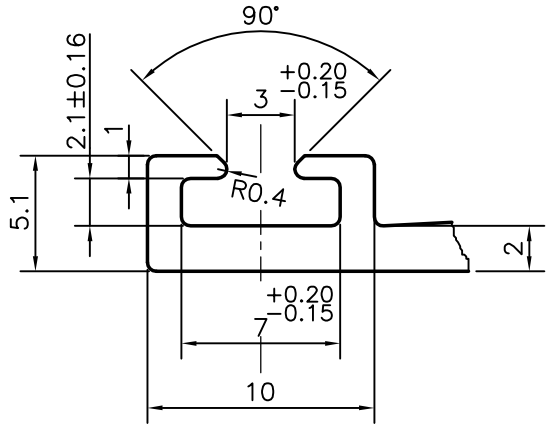

DETAIL OF "A"
SCALE 3:1

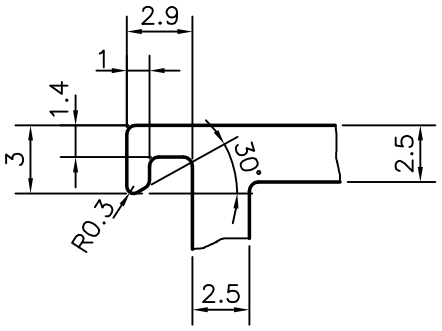

DETAIL OF "B"
SCALE 3:1

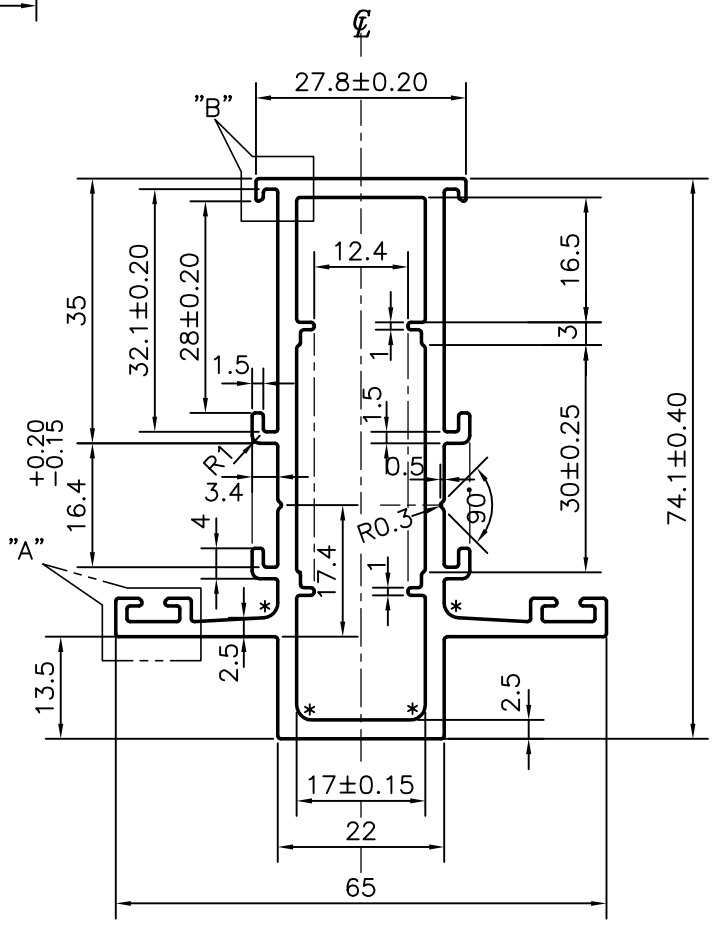

* = 2 RADIUS (4 PLACE)

PERMANENT EXCLUSIVE

			NAME	DATE
SYMBOL OF QUALITY AN ISO 9001 COMPANY	*JINDAL ALUMINIUM LTD.* *BANGALORE-560073 (INDIA)*	DRAWN	J.P.KAUSHIK	07-10-2010
		CHECKED		
		APPROVED	S.S.GARG	19-10-2010

1. ALL DIMENSIONS ARE IN mm.
2. ROUND OFF ALL SHARP CORNERS WITH 0.40 mm.
3. TOLERANCES WILL BE AS PER IS:6477-1983 UNLESS OTHERWISE SPECIFIED

SCALE	1:1
AREA mm^2	635.861
PERIMETER mm.	369.757
WEIGHT kg/m	1.717

PARTY'S NAME	ALUPRO BUILDING SYSTEMS.PVT.LTD.,BANGALORE
PARTY'S DRAWING No.	AS PER DRAWING
ALLOY & TEMPER	HE9 WP
DESCRIPTION	WINDOW SECTION

DRAWING No.	SECTION No.
P-10344-2	–
X1387	X1387