P-4079-2
4912
22870
X1405

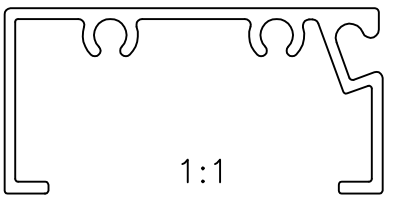

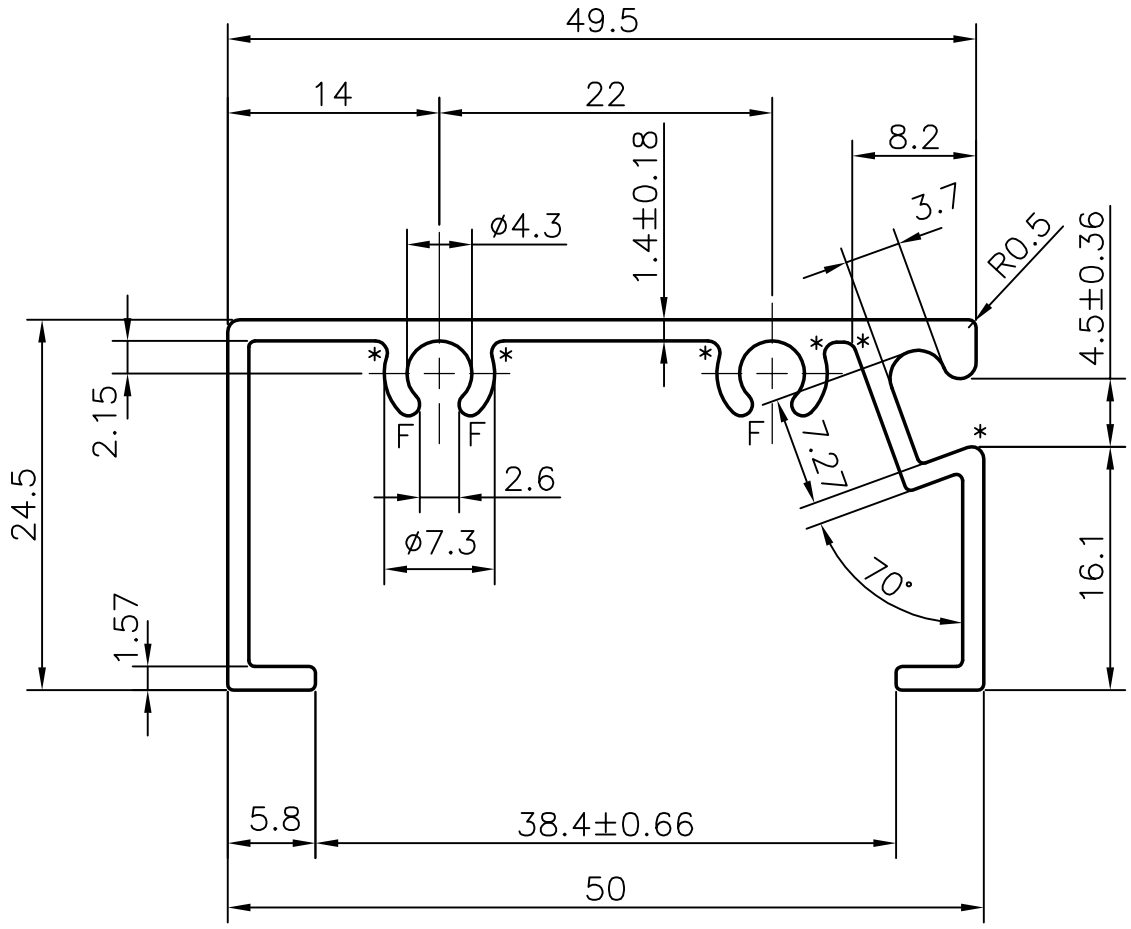

1. GENERAL WALL THICKNESS:-1.40 mm.±0.18
2. F = FULL RADIUS (4)
3. * = 0.8 RADIUS (6)

			NAME	DATE
JINDAL SYMBOL OF QUALITY AN ISO 9002 COMPANY	*JINDAL ALUMINIUM LTD.* *BANGALORE-560073 (INDIA)*	DRAWN	R.D.Sharma	21-01-03
		CHECKED		
		APPROVED		
1. ALL DIMENSIONS ARE IN mm. 2. ROUND OFF ALL SHARP CORNERS WITH 0.40 mm. 3. TOLERANCES WILL BE AS PER COMMERCIAL, UNLESS OTHERWISE SPECIFIED		SCALE	2:1	
PARTY'S NAME	PROSOURCE INDUSTRIAL SOLUTIONS INC.	AREA mm^2	199.5	
		PERIMETER mm.	255.3	
PARTY'S DRAWING No.	AS PER DRAWING	WEIGHT kg/m	0.539	
ALLOY & TEMPER	6063 T5	SECTION No.	X1405	
DESCRIPTION	MISCELLANEOUS SECTION	DRAWING No.	X1405	