P−10548−1
X1426

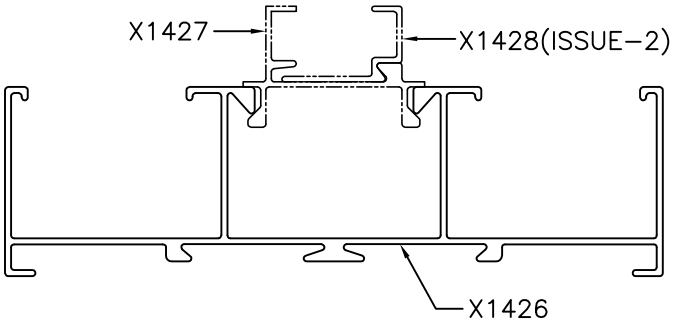

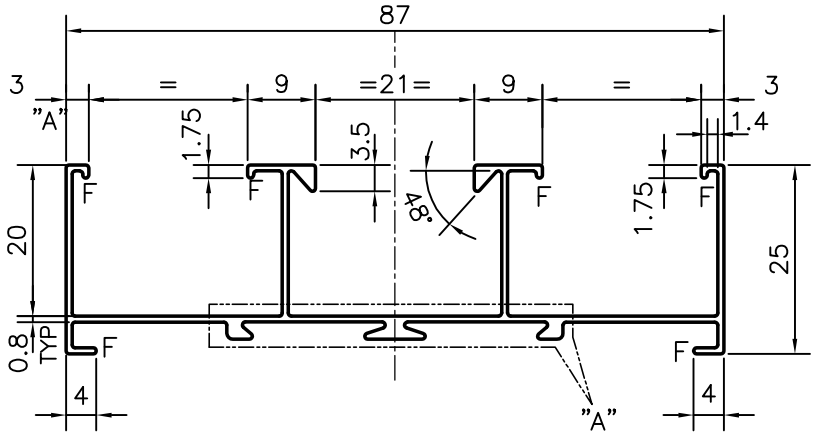

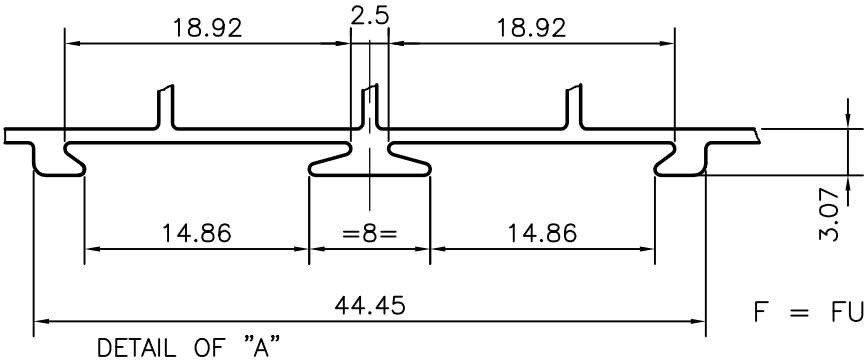

DETAIL OF "A"
SCALE 2:1

F = FULL RADIUS (6 PLACES)

PERMANENT EXCLUSIVE

JINDAL SYMBOL OF QUALITY AN ISO 9001 COMPANY	*JINDAL ALUMINIUM LTD.* *BANGALORE−560073 (INDIA)*		NAME	DATE
		DRAWN	J.P.KAUSHIK	17−11−2010
		CHECKED		
		APPROVED	S.S.GARG	20−11−2010
1. ALL DIMENSIONS ARE IN mm. 2. ROUND OFF ALL SHARP CORNERS WITH 0.40 mm. 3. TOLERANCES WILL BE AS PER IS:3965−1981 UNLESS OTHERWISE SPECIFIED		SCALE		1:1
		AREA mm^2		197.984
		PERIMETER mm.		438.808
		WEIGHT kg/m		0.535
PARTY'S NAME	ASHWANI & SONS, GHAZIABAD	DRAWING No.		SECTION No.
PARTY'S DRAWING No.	AS PER DRAWING	P−10548−1		−
ALLOY & TEMPER	HE9 WP	X1426		X1426
DESCRIPTION	WINDOW SECTION (TOP)			