P−10489
X1438

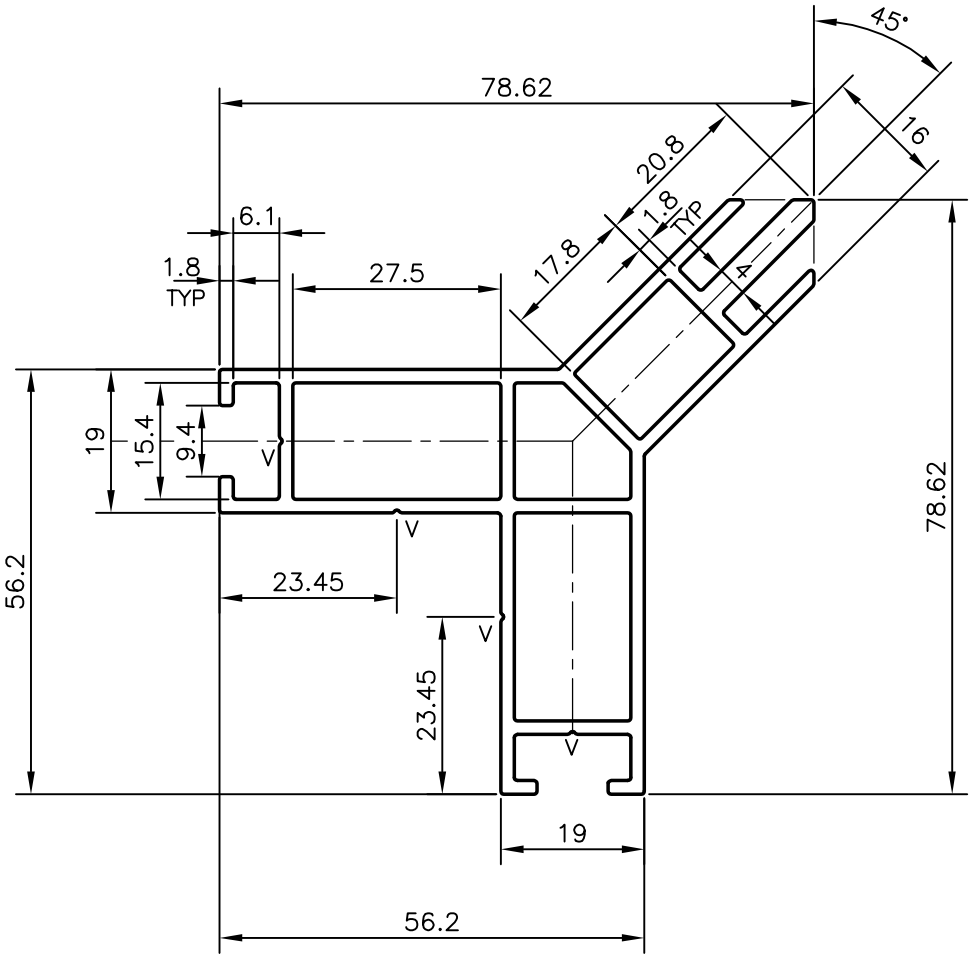

V = V GROOVE 0.4x90° (4 PLACES)

JINDAL SYMBOL OF QUALITY AN ISO 9001 COMPANY	*JINDAL ALUMINIUM LTD.* *BANGALORE−560073 (INDIA)*		NAME	DATE
		DRAWN	J.P.KAUSHIK	19−10−2010
		CHECKED		
		APPROVED	S.S.GARG	11−12−2010
1. ALL DIMENSIONS ARE IN mm. 2. ROUND OFF ALL SHARP CORNERS WITH 0.40 mm. 3. TOLERANCES WILL BE AS PER,BS:EN−755 UNLESS OTHERWISE SPECIFIED		SCALE		1:1
		AREA mm^2		667.63
		PERIMETER mm.		395.133
		WEIGHT kg/m		1.803
PARTY'S NAME	WENTEX BV− THE NETHERLANDS	DRAWING No.		SECTION No.
PARTY'S DRAWING No.	CORNER SECTION	P−10489		−
ALLOY & TEMPER	6063 T6	X1438		X1438
DESCRIPTION	CORNER SECTION			