P-10736-1

X1480

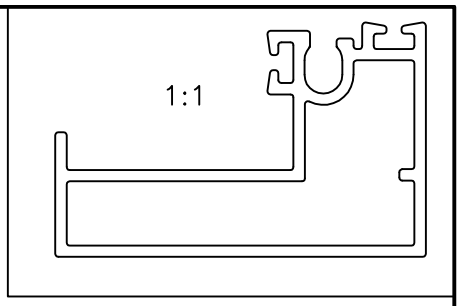

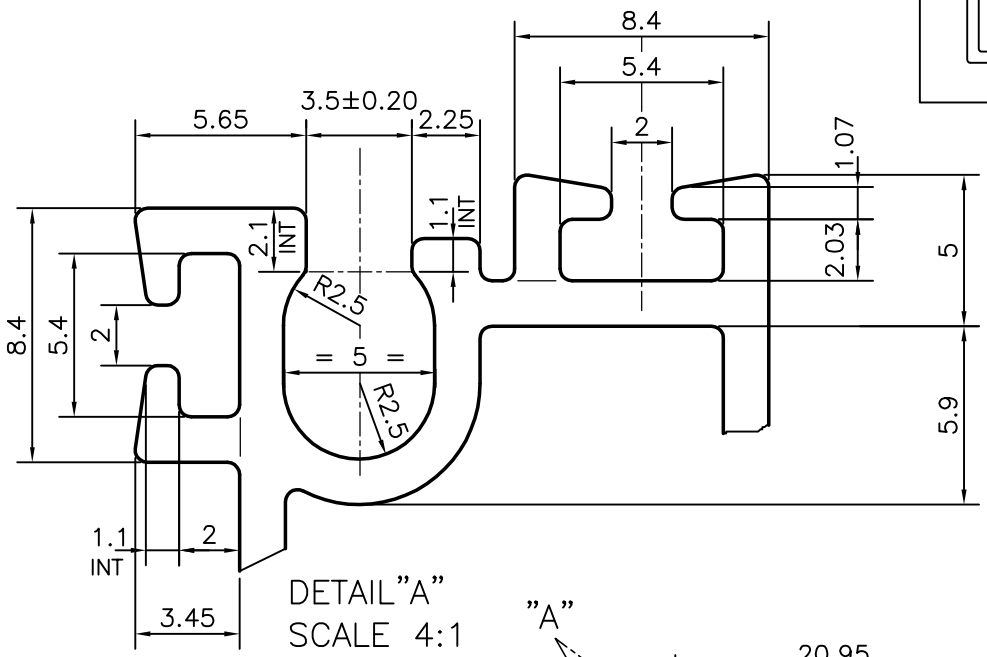

DETAIL"A"
SCALE 4:1

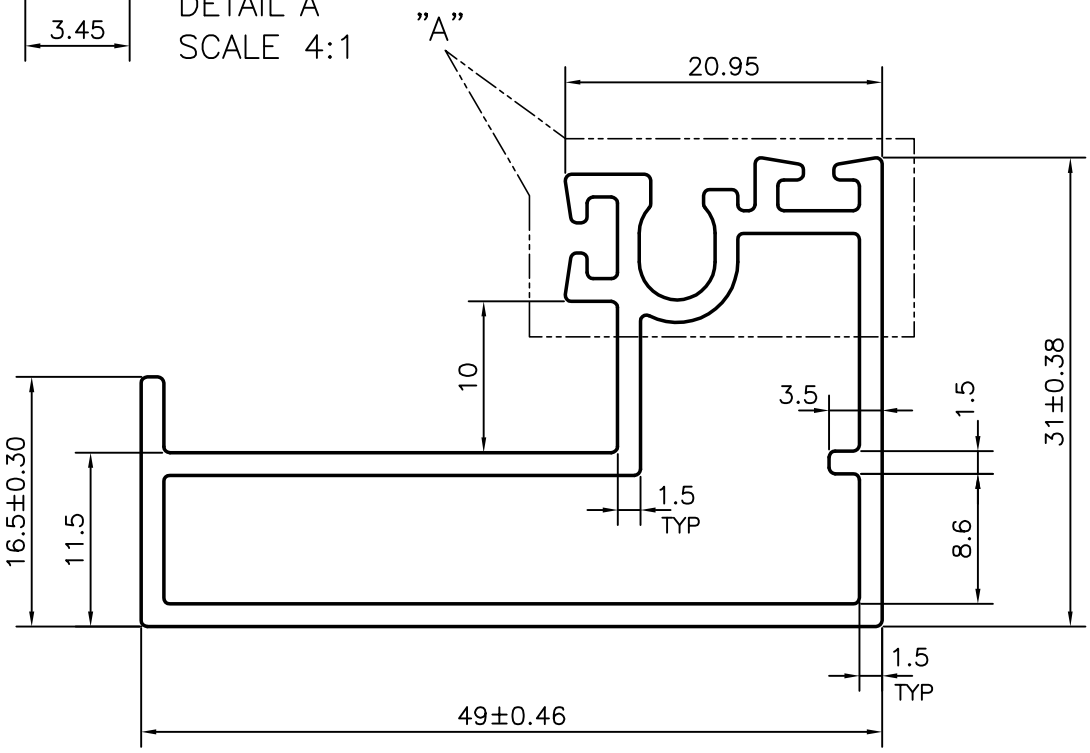

			NAME	DATE
SYMBOL OF QUALITY AN ISO 9001 COMPANY	*JINDAL ALUMINIUM LTD.* *BANGALORE-560073 (INDIA)*	DRAWN	J.P.KAUSHIK	10-02-2011
		CHECKED		
		APPROVED	J.N. RAI	18-02-2011

1. ALL DIMENSIONS ARE IN mm.
2. ROUND OFF ALL SHARP CORNERS WITH 0.40 mm.
3. TOLERANCES WILL BE AS PER, IS:6477-1983 UNLESS OTHERWISE SPECIFIED

SCALE	2:1
AREA mm^2	275.642
PERIMETER mm.	216.651
WEIGHT kg/m	0.744

PARTY'S NAME	AMBICA ALUMINUM COMPANY, BANGALORE
PARTY'S DRAWING No.	5783
ALLOY & TEMPER	HE9 WP
DESCRIPTION	MISC. SECTION

DRAWING No.	SECTION No.
P-10736-1	–
X1480	X1480