| | |
|---|---|
| P–11014 | |
| X1524 | |

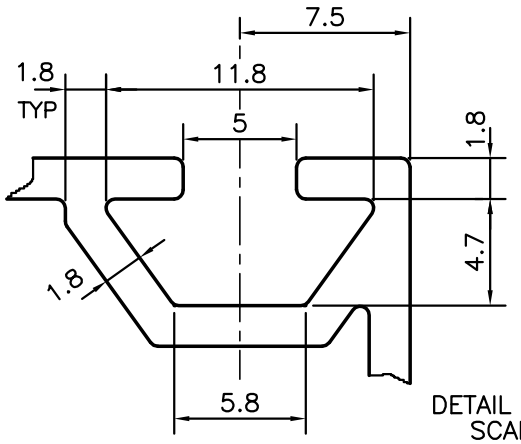


DETAIL OF "A"
SCALE 3:1

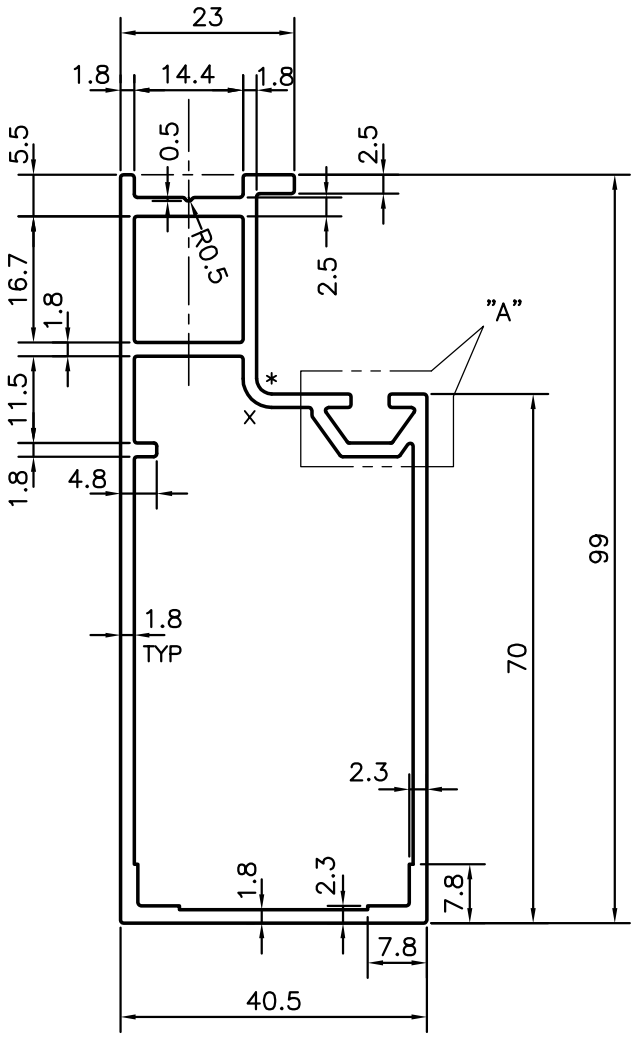


x = 3.8 RADIUS
* = 2.0 RADIUS

| | | | | |
|---|---|---|---|---|
| JINDAL<br>SYMBOL OF QUALITY<br>AN ISO 9001 COMPANY | *JINDAL ALUMINIUM LTD.*<br>*BANGALORE–560073 (INDIA)* | | NAME | DATE |
| | | DRAWN | J.P.KAUSHIK | 08–06–2011 |
| | | CHECKED | | |
| | | APPROVED | S.S.GARG | 05–07–2011 |
| 1. ALL DIMENSIONS ARE IN mm.<br>2. ROUND OFF ALL SHARP CORNERS WITH 0.40 mm.<br>3. TOLERANCES WILL BE AS PER, IS:6477–1983 UNLESS OTHERWISE SPECIFIED | | SCALE | | 1:1 |
| | | AREA $mm^2$ | | 574.594 |
| | | PERIMETER mm. | | 314.064 |
| | | WEIGHT kg/m | | 1.551 |
| PARTY'S NAME | AMBICA ALUMINIUM CO., BANGALORE | DRAWING No. | | SECTION No. |
| PARTY'S DRAWING No. | 5780 | P–11014 | | – |
| ALLOY & TEMPER | HE9 WP | X1524 | | X1524 |
| DESCRIPTION | CURTAIN WALL SECTION | | | |