P–9914
X1539

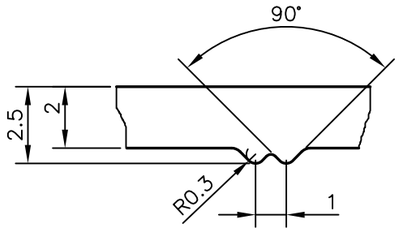

DETAIL"A"
SCALE 5:1

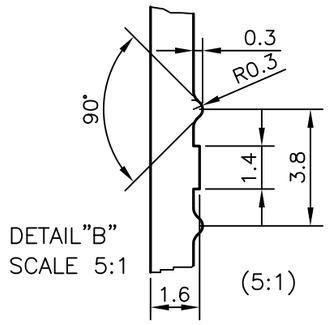

DETAIL"B"
SCALE 5:1

(5:1)

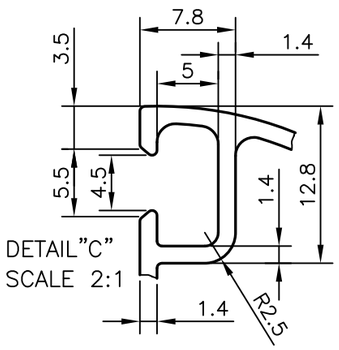

DETAIL"C"
SCALE 2:1

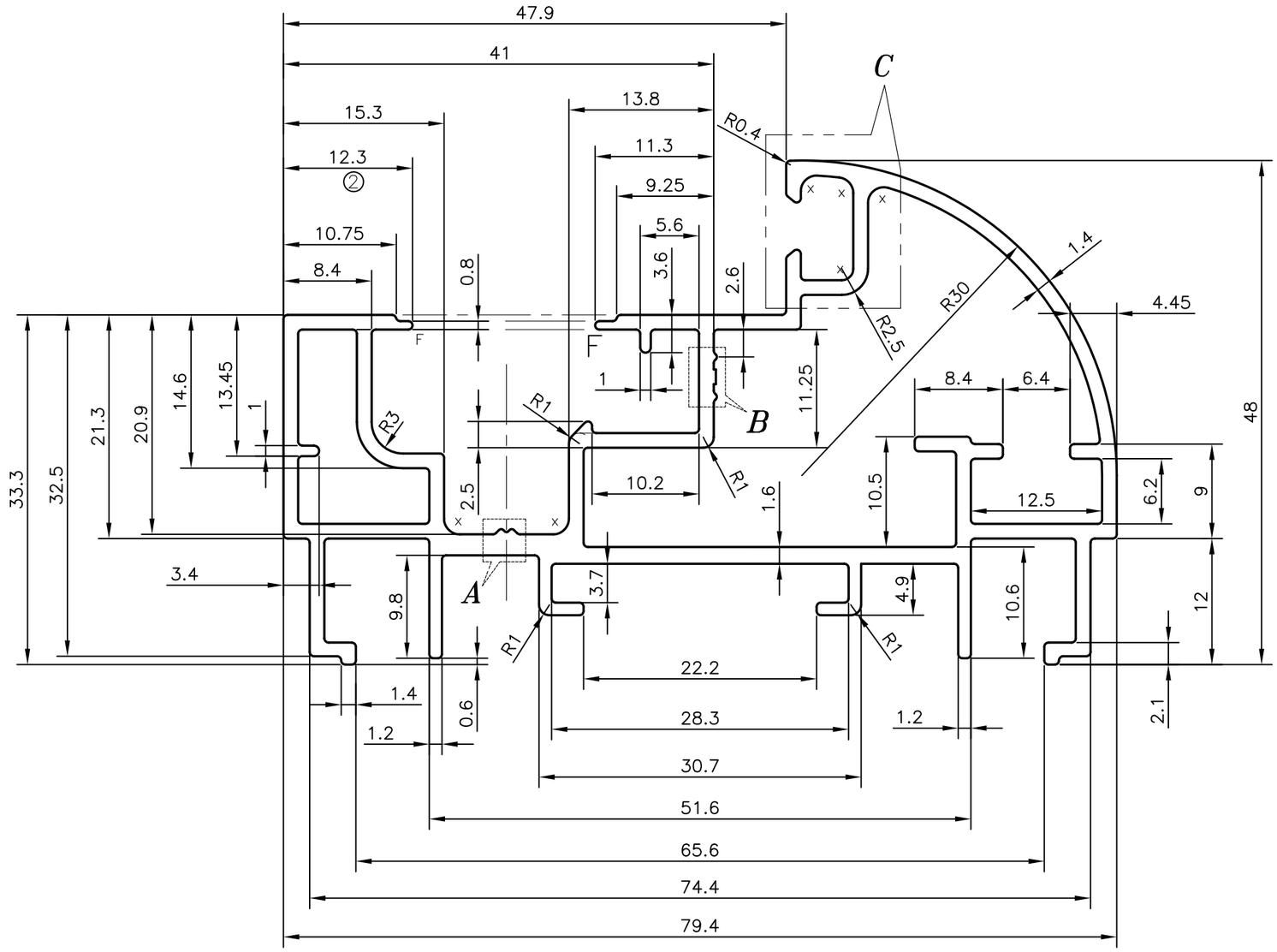

ISSUE–2
DIMENSION CHANGED FROM 12.4 mm TO 12.3 mm

F = FULL RADIUS (2 PLACES)
UNSPECIFIED WALL THICKNESS 1.4 mm
x = 1.5 RADIUS (6 PLACES)

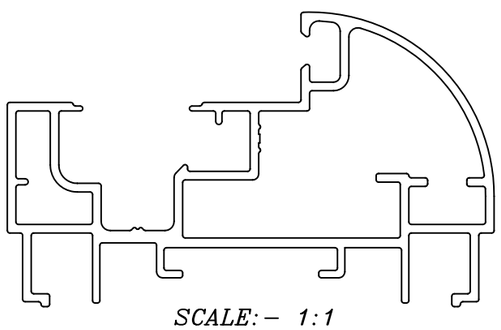

SCALE:– 1:1

JINDAL
SYMBOL OF QUALITY
AN ISO 9001 COMPANY

JINDAL ALUMINIUM LTD.
BANGALORE–560073 (INDIA)

1. ALL DIMENSIONS ARE IN mm.
2. ROUND OFF ALL SHARP CORNERS WITH 0.40 mm.
3. TOLERANCES WILL BE AS PER BS:EN–755–9 UNLESS OTHERWISE SPECIFIED

		NAME	DATE
DRAWN		J.P.KAUSHIK	24–11–2018
CHECKED			
APPROVED		B,NATARAJA	10–12–2018
SCALE			1:1
AREA mm^2			504.676
PERIMETER mm.			434.84
WEIGHT kg/m			1.363

PARTY'S NAME	APPLIED MATERIALS TRADING LTD., DUBAI
PARTY'S DRAWING No.	AS PER SAMPLE
ALLOY & TEMPER	6063 T6
DESCRIPTION	MISC. SECTION

DRAWING No.	SECTION No.
P–9914	–
X1539	X1539(ISSUE–2)