P–11490	
X1586	

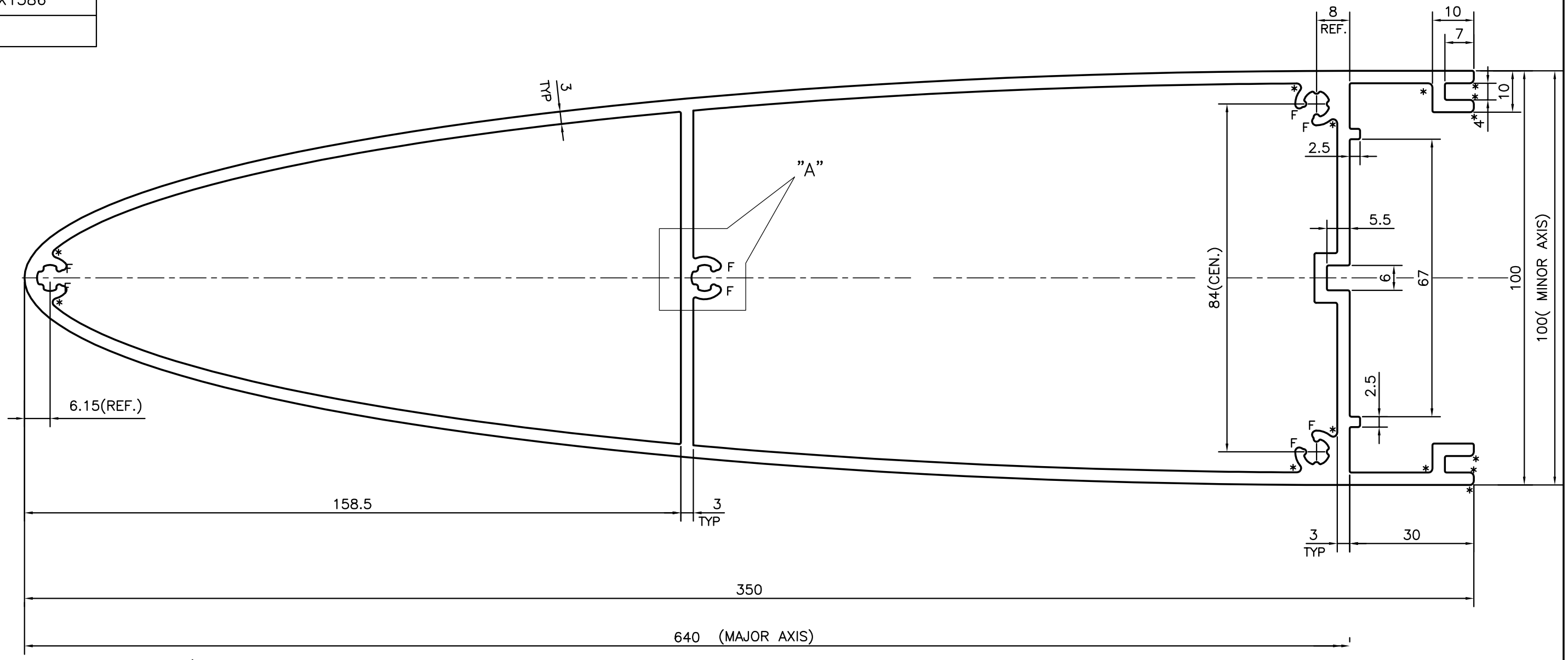

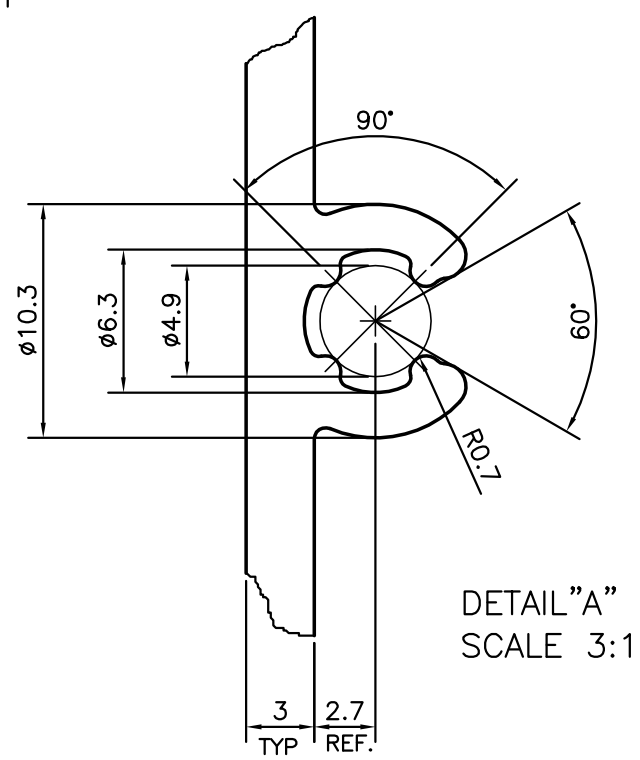

DETAIL"A"
SCALE 3:1

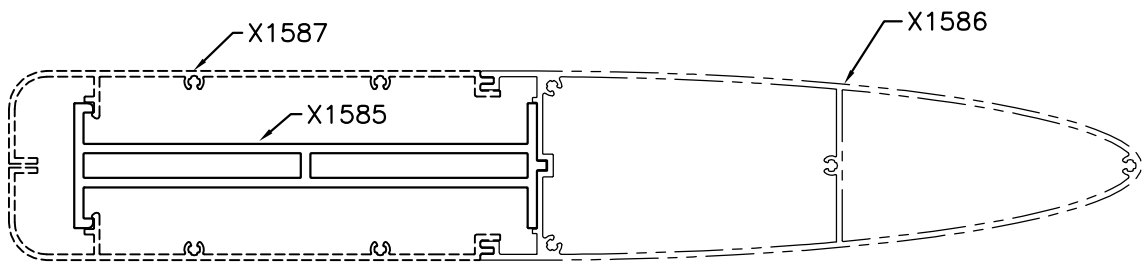

F = FULL RADIUS (8 PLACES)
* = 1.0 RADIUS (12 PLACES)

JINDAL
SYMBOL OF QUALITY
AN ISO 9001 COMPANY

JINDAL ALUMINIUM LTD.
BANGALORE–560073 (INDIA)

1. ALL DIMENSIONS ARE IN mm.
2. ROUND OFF ALL SHARP CORNERS WITH 0.40 mm.
3. TOLERANCES WILL BE AS PER BS:EN–755–9 UNLESS OTHERWISE SPECIFIED

PARTY'S NAME	THOMAS BENNETT, GULF LLC
PARTY'S DRAWING No.	SCB–014
ALLOY & TEMPER	6063 T6
DESCRIPTION	FIN SECTION

	NAME	DATE
DRAWN	J.P.KAUSHIK	24–01–2012
CHECKED		
APPROVED	S.S.GARG	27–03–2012
SCALE		1:1
AREA mm^2		2969.713
PERIMETER mm.		951.373
WEIGHT kg/m		8.018

DRAWING No.	SECTION No.
P–11490	–
X1586	X1586