P−12828
X1679

TOLERANCE APPROVAL AS PER Sh. U.C.D

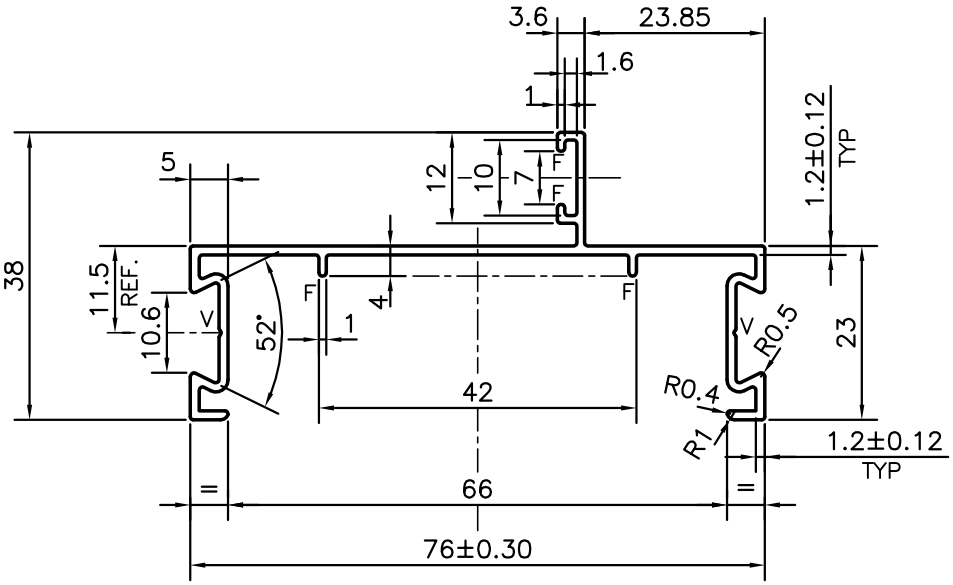

TOLERANCE CHART CD = CIRCUMSCRIBING CIRCLE

CD≤100	100<CD≤200	200<CD<300	300<CD<500
UPTO 10mm − ±0.25	±0.30	±0.35	±0.40
10.0 −25.0 − ±0.30	±0.40	±0.50	±0.60
25.0 −50.0 − ±0.50	±0.60	±0.80	±0.90
50.0 −100.0 − ±0.70	±0.90	±1.10	±1.30
100 − 150 − −	±1.10	±1.30	±1.50
150 − 200 − −	±1.3	±1.50	±1.80
200 − 300 − −	−	±1.70	±2.10
300 − 450 − −	−	−	±2.80

V= V GROOVE 0.30x90°(2PLACES)
F= FULL RADIUS (4 PLACES)

JINDAL
SYMBOL OF QUALITY
AN ISO 9001 COMPANY

JINDAL ALUMINIUM LTD.
BANGALORE−560073 (INDIA)

	NAME	DATE
DRAWN	J.P.KAUSHIK	08−06−2013
CHECKED		
APPROVED	S.S.GARG	21−06−2013
SCALE		1:1
AREA mm^2		203.773
PERIMETER mm.		343.493
WEIGHT kg/m		0.550

1. ALL DIMENSIONS ARE IN mm.
2. ROUND OFF ALL SHARP CORNERS WITH 0.40 mm.
3. TOLERANCES WILL BE AS PER BS:EN−755−9 UNLESS OTHERWISE SPECIFIED

PARTY'S NAME	COMARK LANKA (PVT.) LIMITED, COLOMBO
PARTY'S DRAWING No.	9158
ALLOY & TEMPER	6063 T6
DESCRIPTION	WINDOW SECTION

DRAWING No.	SECTION No.
P−12828	−
X1679	X1679