P–13051
X1693

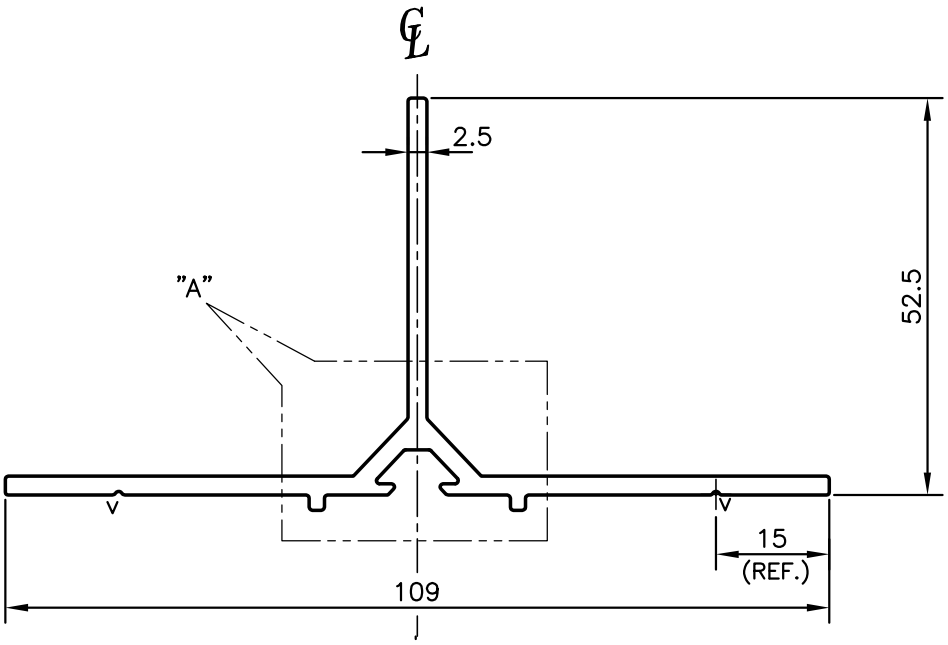

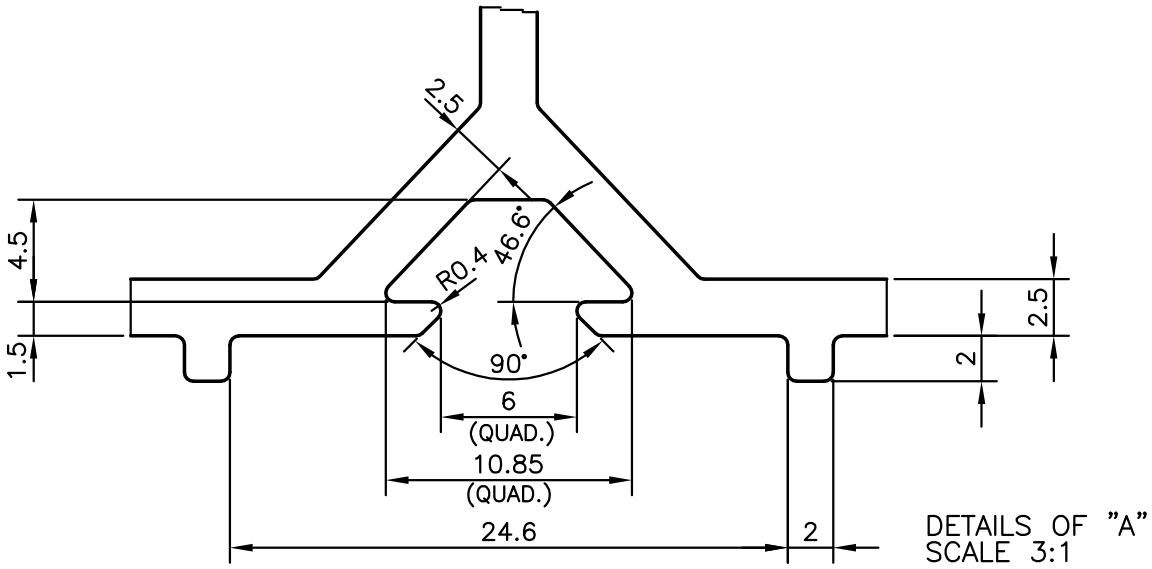

V = 0.5x90° (2 PLACES)

TOLERANCES ON OVERALL WIDTHS & WIDTHS ACROSS FLATS OF BARS, & REGULAR SECTIONS

UPTO 6.40mm – ±0.20	UPTO 32.0mm – ±0.38	UPTO 120.0mm – ±0.85	1. STRAIGHTNESS=1.7mm/M
UPTO 10.0mm – ±0.23	UPTO 50.0mm – ±0.46	UPTO 160.0mm – ±1.02	2. TWIST=1.7mm/M
UPTO 12.0mm – ±0.25	UPTO 60.0mm – ±0.53	UPTO 200.0mm – ±1.14	3. ANGULARITY= ±2°
UPTO 16.0mm – ±0.28	UPTO 80.0mm – ±0.69	UPTO 250.0mm – ±1.40	4. FLATNESS =0.3mm
UPTO 25.0mm – ±0.30	UPTO 100.0mm – ±0.75	UPTO 320.0mm – ±1.70	

JINDAL
SYMBOL OF QUALITY
AN ISO 9001 COMPANY

JINDAL ALUMINIUM LTD.
BANGALORE–560073 (INDIA)

	NAME	DATE
DRAWN	*SRIVATHSA*	26–09–2013
CHECKED		
APPROVED	S.S.GARG	04–10–2013

1. ALL DIMENSIONS ARE IN mm.
2. ROUND OFF ALL SHARP CORNERS WITH 0.40 mm.
3. TOLERANCES WILL BE AS PER IS:3965–1981, UNLESS OTHERWISE SPECIFIED

SCALE	1:1
AREA mm^2	415.284
PERIMETER mm.	335.842
WEIGHT kg/m	1.121

PARTY'S NAME	SUMIT CORPORATION, MUMBAI
PARTY'S DRAWING No.	AS PER DRAWING
ALLOY & TEMPER	6063 T6
DESCRIPTION	MISC. T–SECTION

DRAWING No.	SECTION No.
P–13051	–
X1693	X1693