P−13005−1
S3864
X1694

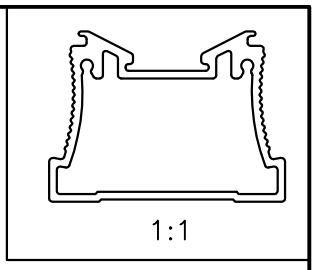

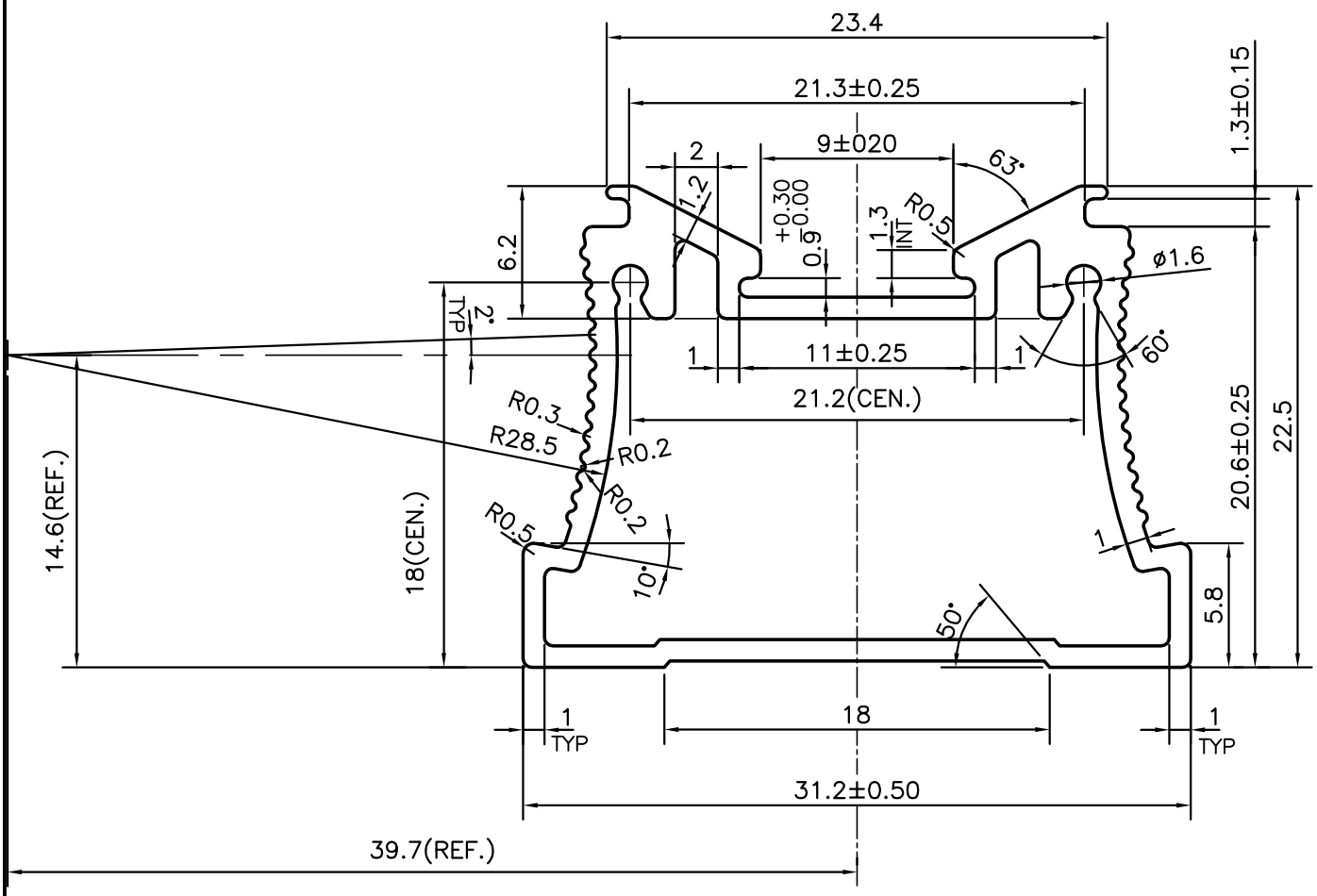

TOLERANCE CHART CD = CIRCUMSCRIBING CIRCLE

CD≤100	100<CD≤200	200<CD<300	300<CD<500
UPTO 10mm − ±0.25	±0.30	±0.35	±0.40
10.0 −25.0 − ±0.30	±0.40	±0.50	±0.60
25.0 −50.0 − ±0.50	±0.60	±0.80	±0.90
50.0 −100.0 − ±0.70	±0.90	±1.10	±1.30
100 − 150 − −	±1.10	±1.30	±1.50
150 − 200 − −	±1.3	±1.50	±1.80
200 − 300 − −	−	±1.70	±2.10
300 − 450 − −	−	−	±2.80

JINDAL

SYMBOL OF QUALITY
AN ISO 9001 COMPANY

JINDAL ALUMINIUM LTD.

BANGALORE−560073 (INDIA)

	NAME	DATE
DRAWN	J.P.KAUSHIK	13−09−2013
CHECKED		
APPROVED	S.S.GARG	21−09−2013

1. ALL DIMENSIONS ARE IN mm.
2. ROUND OFF ALL SHARP CORNERS WITH 0.40 mm.
3. TOLERANCES WILL BE AS PER BS:EN−755−9 , UNLESS OTHERWISE SPECIFIED

SCALE	3:1
AREA mm^2	133.56
PERIMETER mm.	123.67
WEIGHT kg/m	0.361

PARTY'S NAME	PROMPTEC RENEWABLE ENERGY SOLUTIONS PVT. LTD., BANGALORE
PARTY'S DRAWING No.	P00067 REV.1
ALLOY & TEMPER	6063 T6
DESCRIPTION	TUBE LIGHT SECTION

DRAWING No.	SECTION No.
P−13005−1	−
S3864	S3864
X1694	X1694