| |
|---|
| P–14362 |
| X1839 |
| |

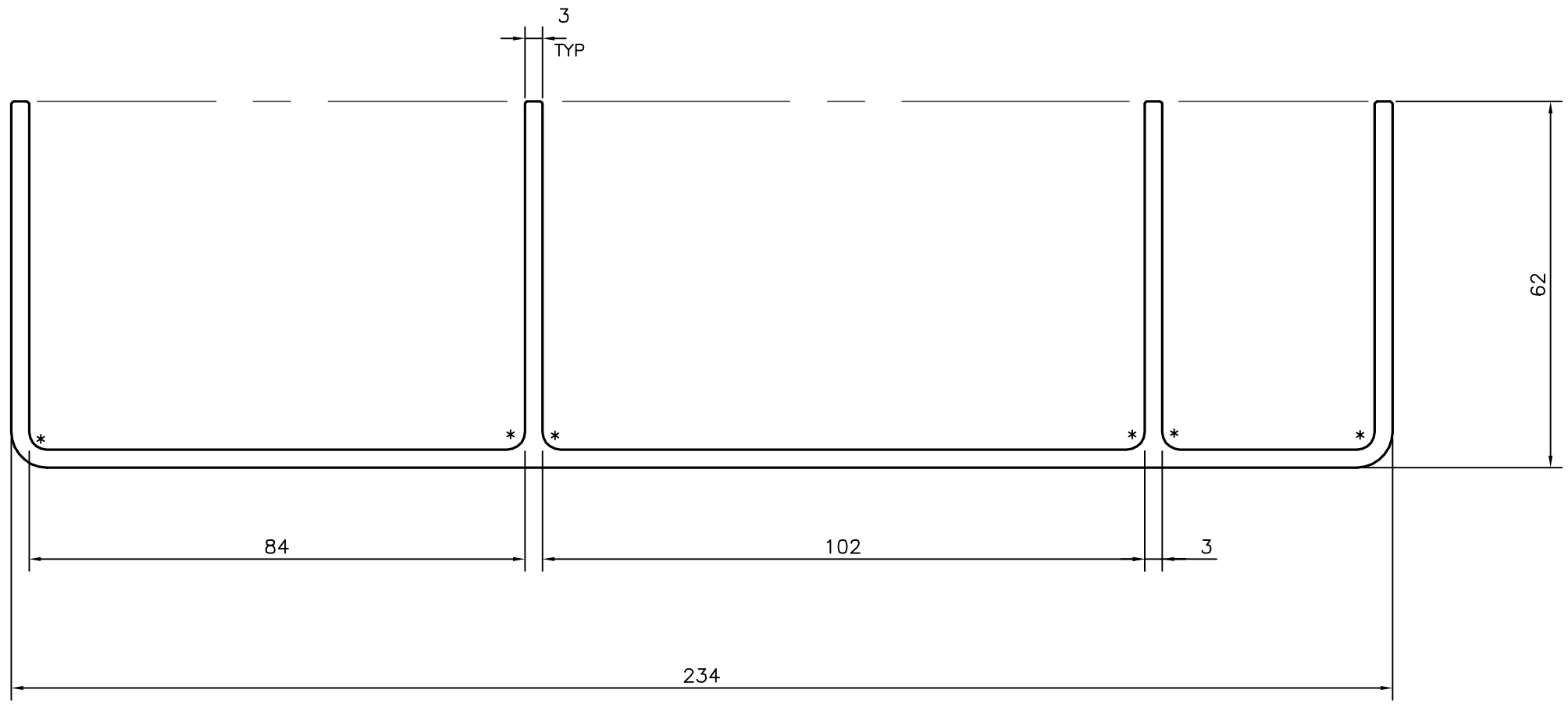


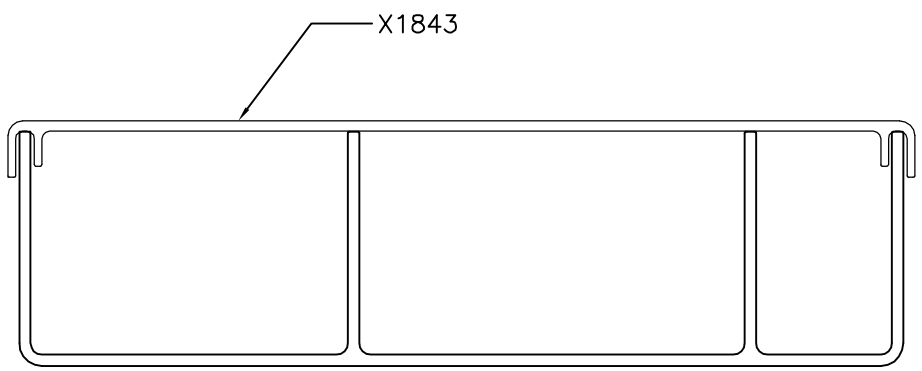


* = RADIUS 3.0 (6 PLACES)

| | | | | |
|---|---|---|---|---|
| JINDAL<br>SYMBOL OF QUALITY<br>AN ISO 9001 COMPANY | *JINDAL ALUMINIUM LTD.*<br>*BANGALORE–560073 (INDIA)* | | NAME | DATE |
| | | DRAWN | J.P.KAUSHIK | 22–01–2015 |
| | | CHECKED | | |
| | | APPROVED | S.S.GARG | 29–01–2015 |
| 1. ALL DIMENSIONS ARE IN mm.<br>2. ROUND OFF ALL SHARP CORNERS WITH 0.40 mm.<br>3. TOLERANCES WILL BE AS PER IS:3965–1981 UNLESS OTHERWISE SPECIFIED | | SCALE | | 1:1 |
| | | AREA $mm^2$ | | 1405.862 |
| | | PERIMETER mm. | | 931.75 |
| PARTY'S NAME | PRESSTON ENGINEERING CORPORATION, BANGALORE | WEIGHT kg/m | | 3.796 |
| | | DRAWING No. | | SECTION No. |
| PARTY'S DRAWING No. | AS DRAWING (B) | P–14362 | | – |
| | | X1839 | | X1839 |
| ALLOY & TEMPER | 6063 T5 | | | |
| DESCRIPTION | DUCT SECTION | | | |