P−14349−1
X1850

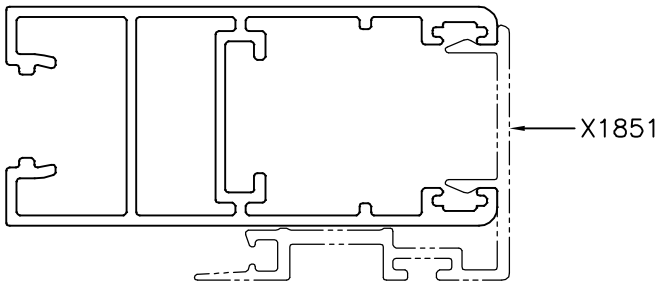

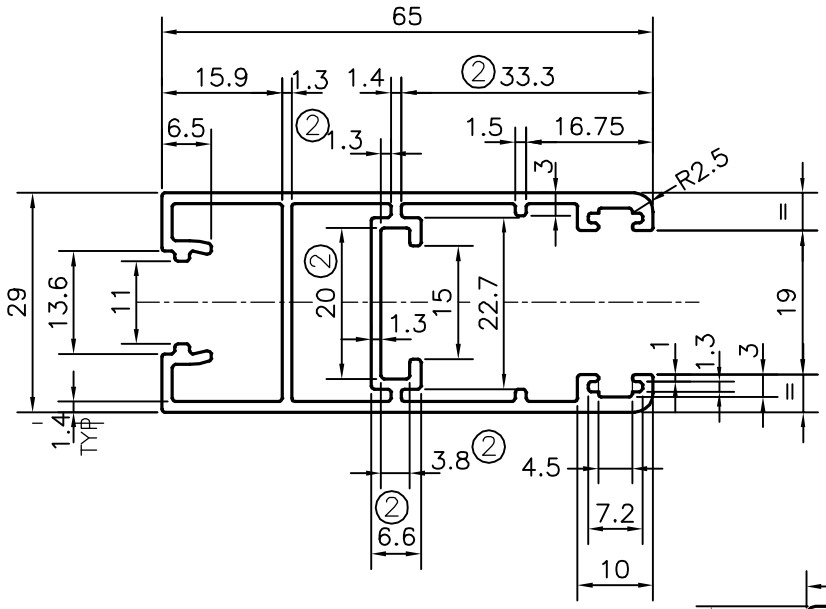

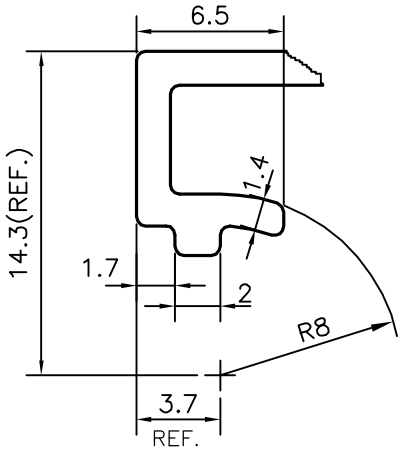

ISSUE−2

DIMENSION CHANGED FROM 5.6 mm TO 6.6 mm & FROM 2.8 mm TO 3.8 mm
DIMENSION CHANGED FROM 19.9 mm TO 20.0 mm & FROM 1.4 mm TO 1.3 mm
DIMENSION CHANGED FROM 32.4 mm TO 33.30 mm
WEIGHT ALSO CHANGED FROM 0.936 TO 0.945 kg/m

			NAME	DATE
JINDAL SYMBOL OF QUALITY AN ISO 9001 COMPANY	*JINDAL ALUMINIUM LTD.* *BANGALORE−560073 (INDIA)*	DRAWN	*J.P.KAUSHIK*	21−11−2017
		CHECKED		
		APPROVED	*B.NATARAJA*	25−11−2017

1. ALL DIMENSIONS ARE IN mm.
2. ROUND OFF ALL SHARP CORNERS WITH 0.40 mm.
3. TOLERANCES WILL BE AS PER IS:6477−1983 , UNLESS OTHERWISE SPECIFIED

SCALE	1:1
AREA mm^2	349.867
PERIMETER mm.	392.664
WEIGHT kg/m	0.945

PARTY'S NAME	LAXMI TRADING COMPNANY, AHMEDABAD
PARTY'S DRAWING No.	AS PER SAMPLE & REQUIREMENT
ALLOY & TEMPER	HE9 WP
DESCRIPTION	WINDOW SECTION

DRAWING No.	SECTION No.
P−14349−1	−
X1850	X1850(ISSUE−2)