P−14347−2
X1852

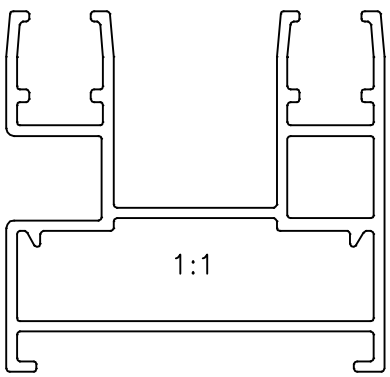

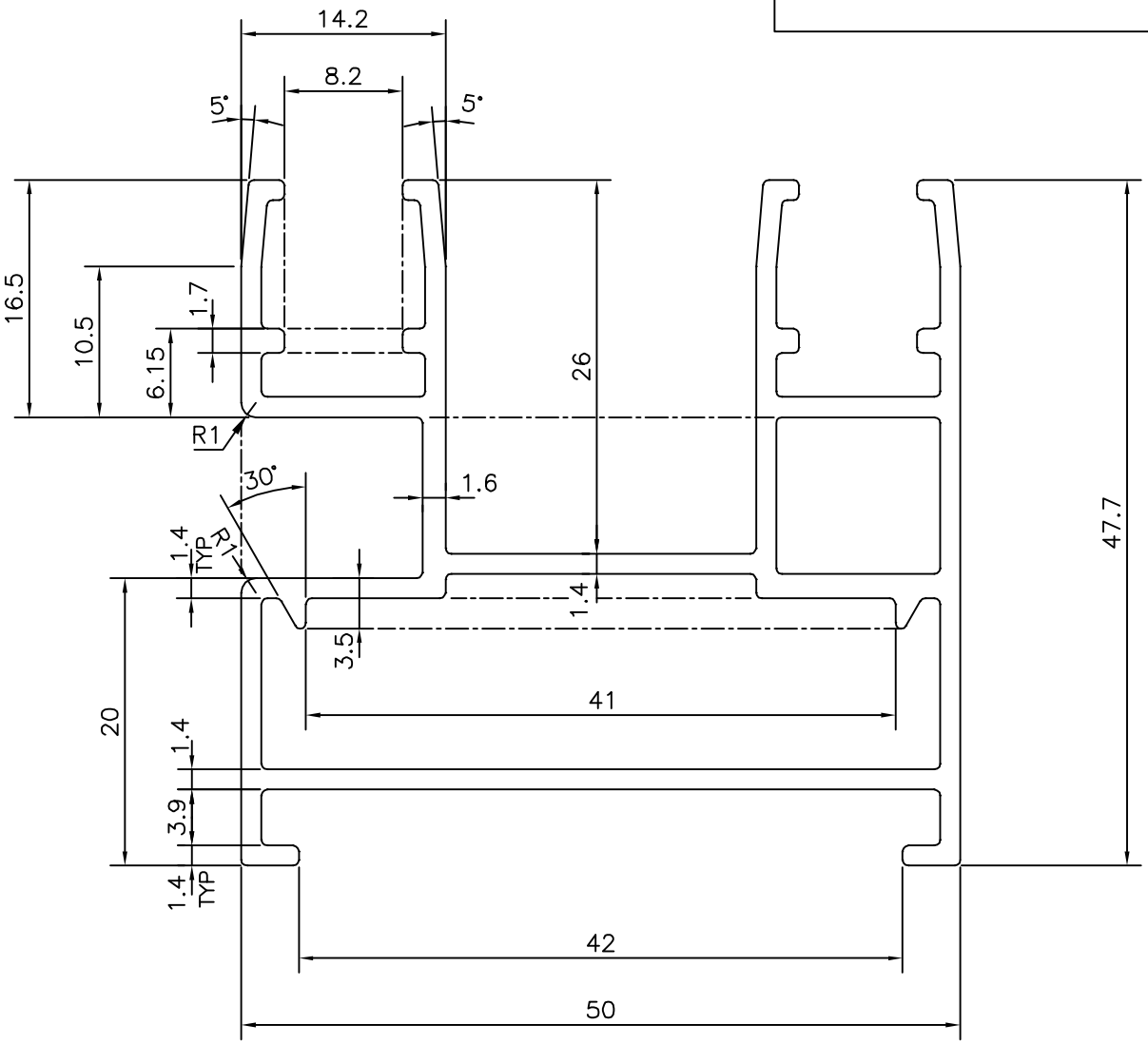

			NAME	DATE
JINDAL SYMBOL OF QUALITY AN ISO 9001 COMPANY	*JINDAL ALUMINIUM LTD.* *BANGALORE−560073 (INDIA)*	DRAWN	*J.P.KAUSHIK*	06−02−2015
		CHECKED		
		APPROVED	S.S.GARG	07−02−2015

1. ALL DIMENSIONS ARE IN mm.
2. ROUND OFF ALL SHARP CORNERS WITH 0.40 mm.
3. TOLERANCES WILL BE AS PER IS:6477−1983 , UNLESS OTHERWISE SPECIFIED

SCALE	2:1
AREA mm^2	394.775
PERIMETER mm.	366.846
WEIGHT kg/m	1.066

PARTY'S NAME	LAXMI TRADING COMPNANY, AHMEDABAD
PARTY'S DRAWING No.	AS PER SAMPLE & REQUIREMENT
ALLOY & TEMPER	HE9 WP
DESCRIPTION	WINDOW SECTION

DRAWING No.	SECTION No.
P−14347−2	−
X1852	X1852