P–14342
X1853

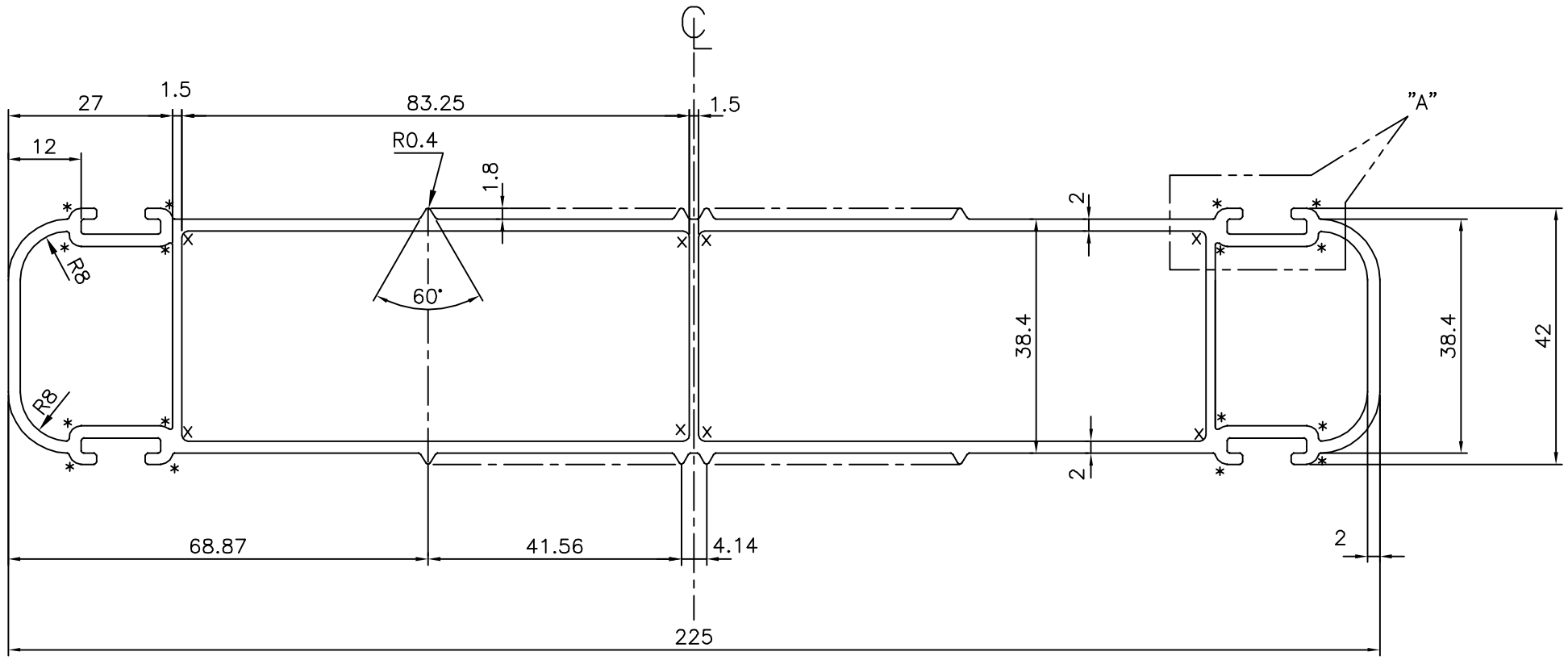

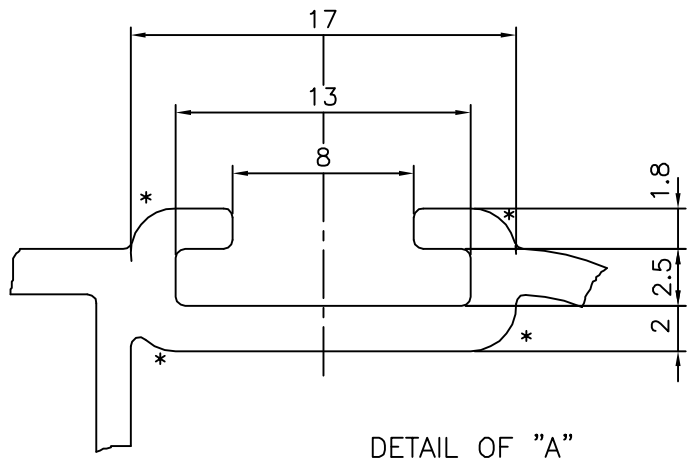

DETAIL OF "A"
SCALE 3:1

*= 2.0 RADIUS (16 PLACES)
x= 1.0 RADIUS (8 PLACES)

JINDAL SYMBOL OF QUALITY AN ISO 9001 COMPANY	*JINDAL ALUMINIUM LTD.* *BANGALORE–560073 (INDIA)*		NAME	DATE
		DRAWN	J.P.KAUSHIK	16–01–2015
		CHECKED		
		APPROVED	S.S.GARG	09–02–2015
1. ALL DIMENSIONS ARE IN mm. 2. ROUND OFF ALL SHARP CORNERS WITH 0.40 mm. 3. TOLERANCES WILL BE AS PER BS:EN–755–9 UNLESS OTHERWISE SPECIFIED		SCALE		1:1
		AREA mm^2		1277.332
		PERIMETER mm.		600.523
		WEIGHT kg/m		3.449
PARTY'S NAME	PAYNES WHOLESALERS LTD, NEW ZEALAND	DRAWING No.		SECTION No.
PARTY'S DRAWING No.	AS PER DRAWING	P–14342		–
ALLOY & TEMPER	6005 T6	X1853		X1853
DESCRIPTION	MISC. SECTION			