P-14405

X1854

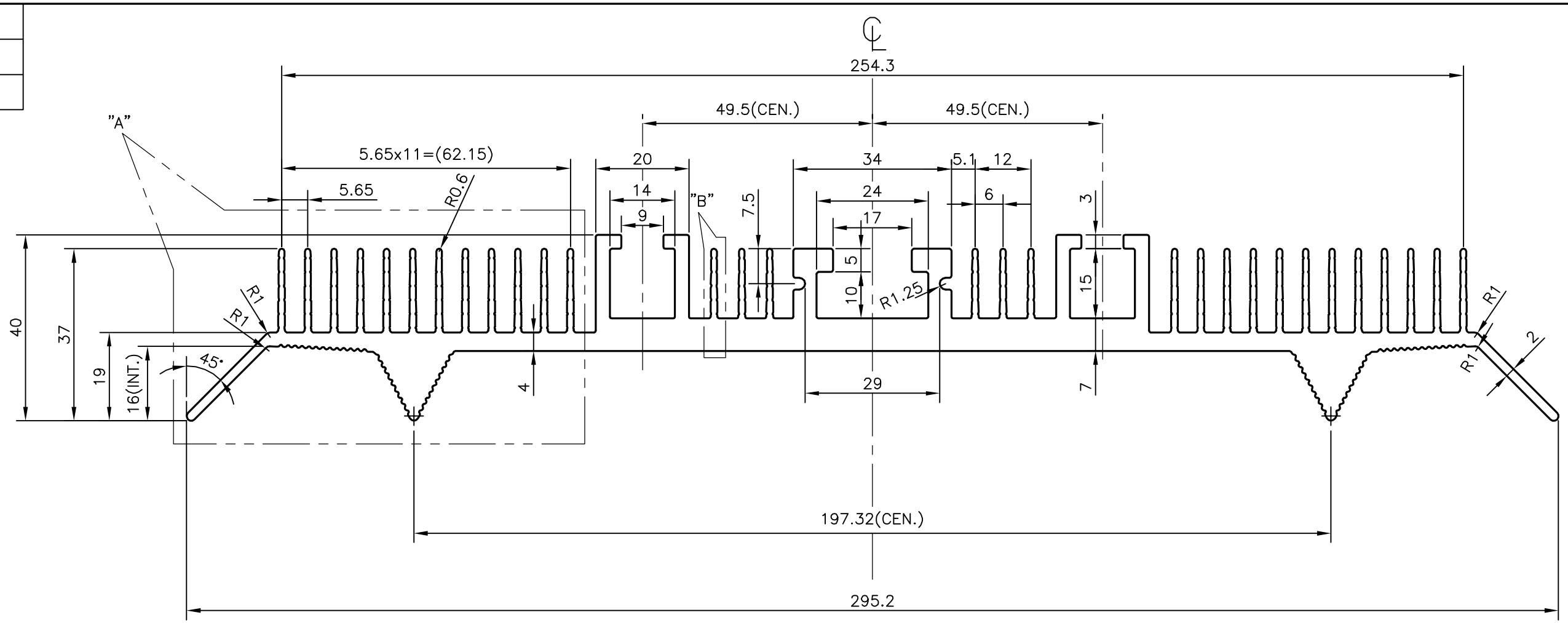

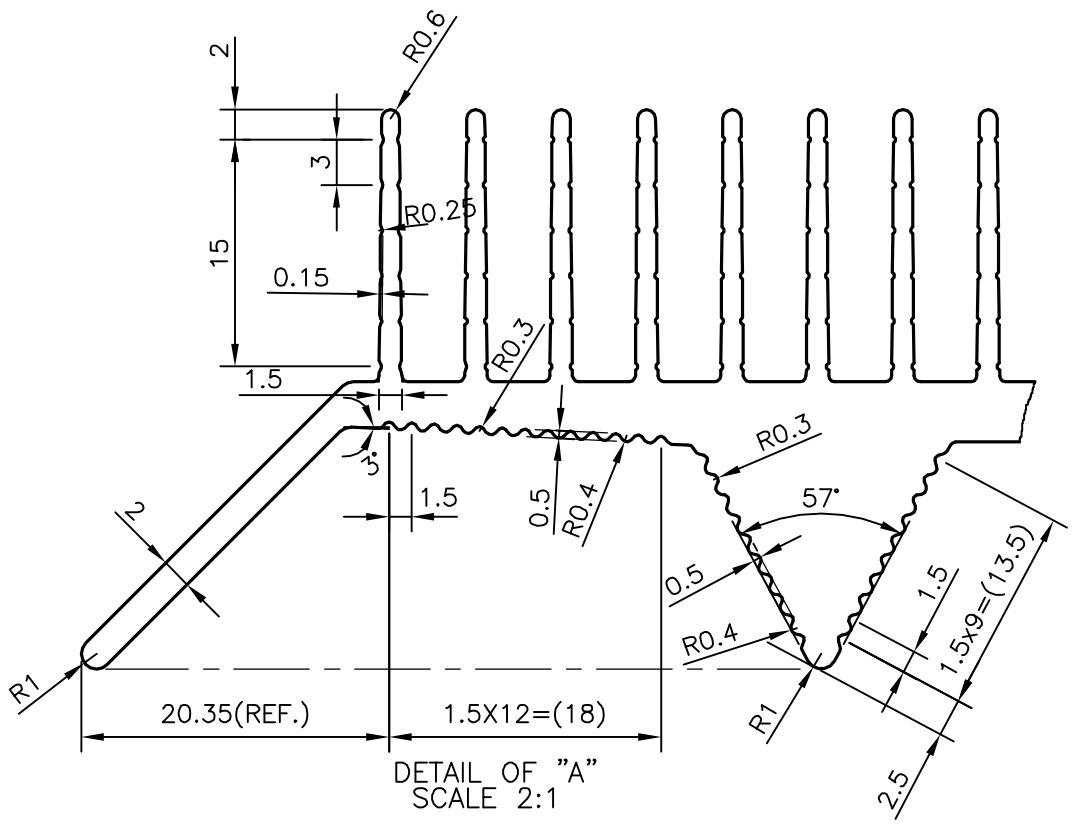

DETAIL OF "A"
SCALE 2:1

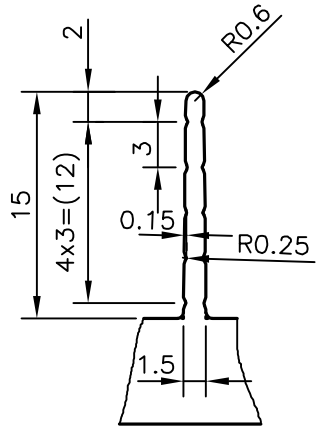

DETAIL OF "B"
SCALE 2:1

			NAME	DATE
JINDAL SYMBOL OF QUALITY AN ISO 9001 COMPANY	*JINDAL ALUMINIUM LTD.* *BANGALORE-560073 (INDIA)*	DRAWN	J.P.KAUSHIK	14-02-2015
		CHECKED		
		APPROVED	S.S.GARG	16-02-2015
1. ALL DIMENSIONS ARE IN mm. 2. ROUND OFF ALL SHARP CORNERS WITH 0.40 mm. 3. TOLERANCES WILL BE AS PER IS:3965-1981 UNLESS OTHERWISE SPECIFIED		SCALE		1:1
		AREA mm^2		2831.402
		PERIMETER mm.		1972.342
PARTY'S NAME	QUADRALUMEN PVT. LTD., THANE	WEIGHT kg/m		7.645
PARTY'S DRAWING No.	AS PER DRAWING	DRAWING No.	SECTION No.	
ALLOY & TEMPER	HE9 WP	P-14405	–	
DESCRIPTION	HEAT SINK SECTION	X1854	X1854	