| | |
|---|---|
| P−14067 | |
| X1873 | |

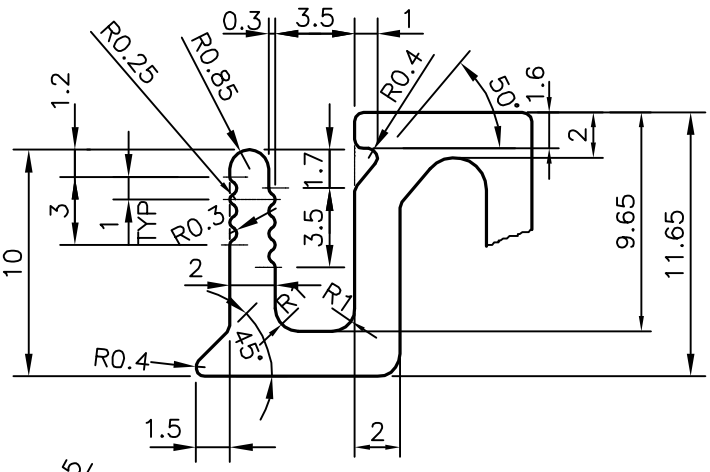


DETAIL−A
SCALE:−3:1

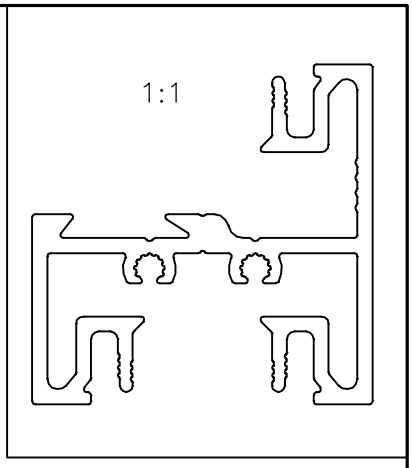


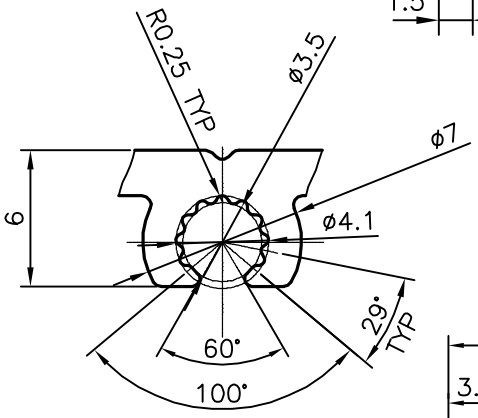


DETAIL−B
SCALE:−3:1

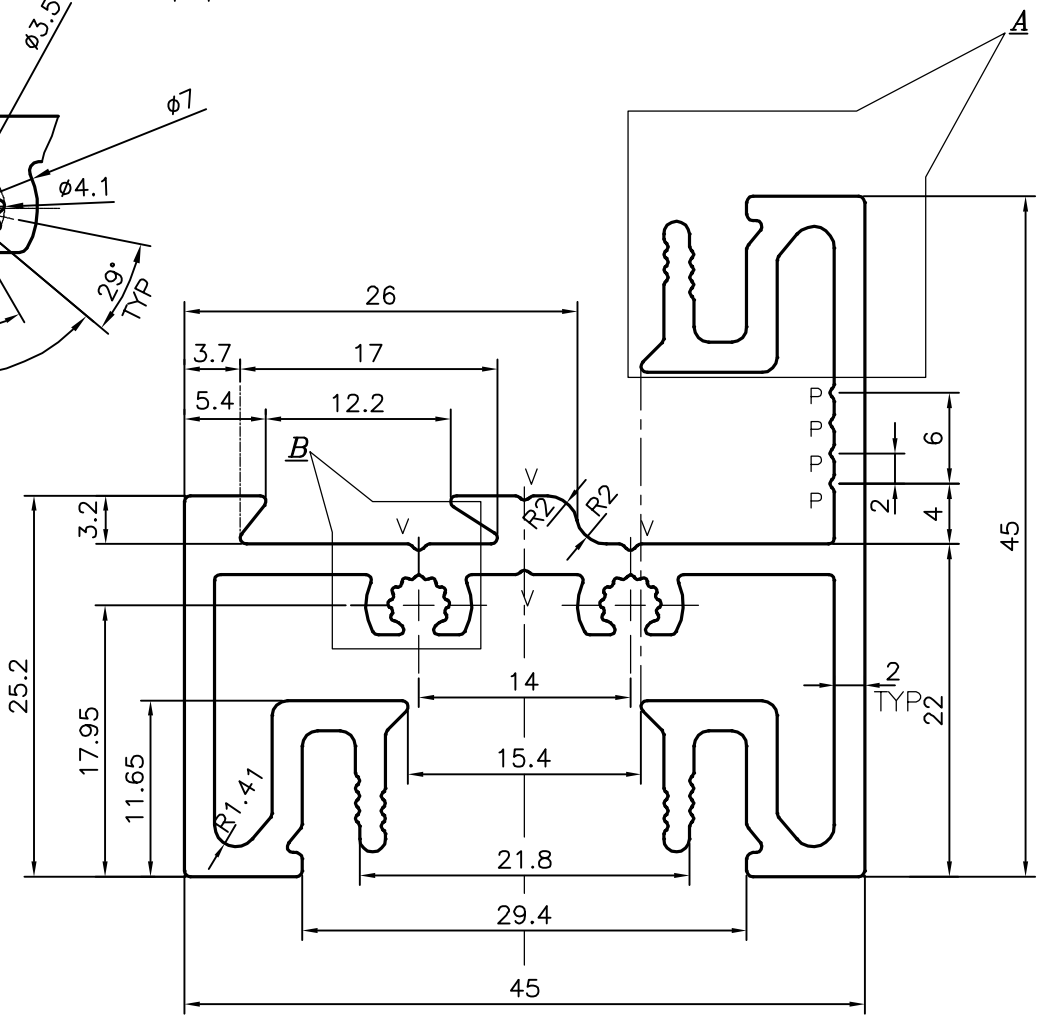


P = PIP 0.3x90°xR0.3 (4 PLACES)
V = VEE GROOVE 0.3x90°xR0.3 (4 PLACES)

| | | | NAME | DATE |
|---|---|---|---|---|
| JINDAL SYMBOL OF QUALITY AN ISO 9001 COMPANY | JINDAL ALUMINIUM LTD. BANGALORE−560073 (INDIA) | DRAWN | J.P.KAUSHIK | 28−10−2014 |
| | | CHECKED | | |
| | | APPROVED | S.S.GARG | 07−05−2015 |

1. ALL DIMENSIONS ARE IN mm.
2. ROUND OFF ALL SHARP CORNERS WITH 0.40 mm.
3. TOLERANCES WILL BE AS PER BS:EN−755−9, UNLESS OTHERWISE SPECIFIED

| | |
|---|---|
| SCALE | 2:1 |
| AREA $mm^2$ | 460.103 |
| PERIMETER mm. | 447.387 |
| WEIGHT kg/m | 1.242 |

| | | DRAWING No. | SECTION No. |
|---|---|---|---|
| PARTY'S NAME | PD ALUMINIUM LTD., UK | | |
| PARTY'S DRAWING No. | AS PER SAMPLE (CS 11) NEW | P−14067 | − |
| ALLOY & TEMPER | 6063 T6 | X1873 | X1873 |
| DESCRIPTION | MISC. SECTION | | |