P−14810
X1925

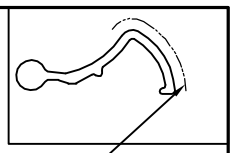

EXPOSED SURFACE

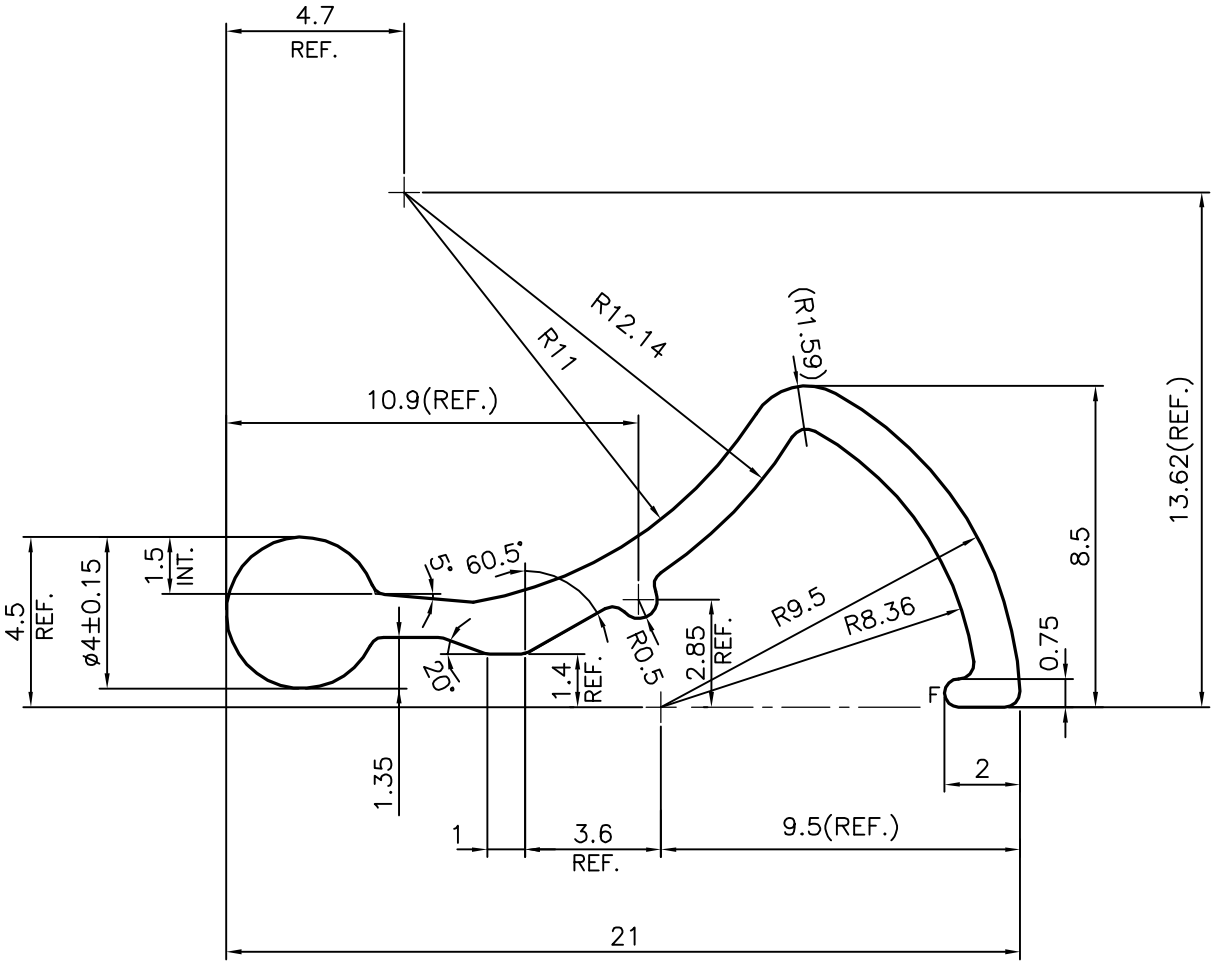

F= FULL RADIUS

			NAME	DATE
SYMBOL OF QUALITY AN ISO 9001 COMPANY	*JINDAL ALUMINIUM LTD.* *BANGALORE−560073 (INDIA)*	DRAWN	J.P.KAUSHIK	27−06−2015
		CHECKED		
		APPROVED	S.S.GARG	05−11−2015

1. ALL DIMENSIONS ARE IN mm.
2. ROUND OFF ALL SHARP CORNERS WITH 0.40 mm.
3. TOLERANCES WILL BE AS PER BS:EN−755−9 UNLESS OTHERWISE SPECIFIED

SCALE	5:1
AREA mm^2	41.547
PERIMETER mm.	61.395
WEIGHT kg/m	0.112

		DRAWING No.	SECTION No.
PARTY'S NAME	BADER AL MULLA & BROS. CO. W.L.L, KUWAIT	P−14810	
PARTY'S DRAWING No.	5000	X1925	X1925
ALLOY & TEMPER	6060 T6		
DESCRIPTION	AIR GRILL SECTION		