P−15353	
X1943	

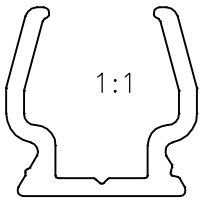

NO EXPOSED SURFACE

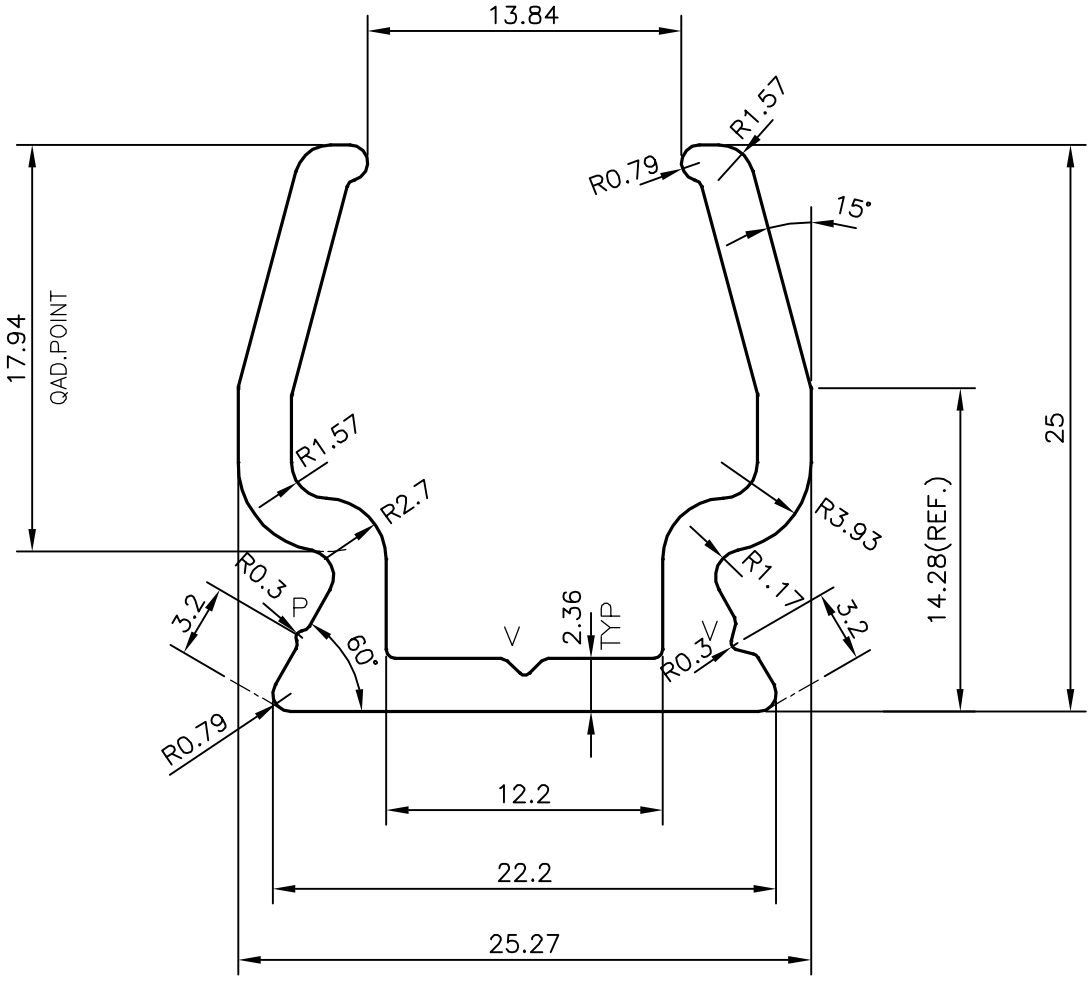

P = PIP 0.3x90°

V = V GROOVE 0.75x90° (2 PLACES)

			NAME	DATE
JINDAL SYMBOL OF QUALITY AN ISO 9001 COMPANY	JINDAL ALUMINIUM LTD. BANGALORE−560073 (INDIA)	DRAWN	J.P.KAUSHIK	26−11−2015
		CHECKED		
		APPROVED	S.S.GARG	10−12−2015

1. ALL DIMENSIONS ARE IN mm.
2. ROUND OFF ALL SHARP CORNERS WITH 0.40 mm.
3. TOLERANCES WILL BE AS PER BS:EN−755−9 , UNLESS OTHERWISE SPECIFIED

SCALE	3:1
AREA mm^2	176.63
PERIMETER mm.	146.819
WEIGHT kg/m	0.477

PARTY'S NAME	UNIVERSAL FABRICATING−CANADA
PARTY'S DRAWING No.	AS PER AutoCAD DRAWING−ES−09022
ALLOY & TEMPER	6063 T6
DESCRIPTION	CAM LOCK BASE

DRAWING No.	SECTION No.
P−15353	−
X1943	X1943