| |
|---|
| P−15680 |
| X1976 |
| |

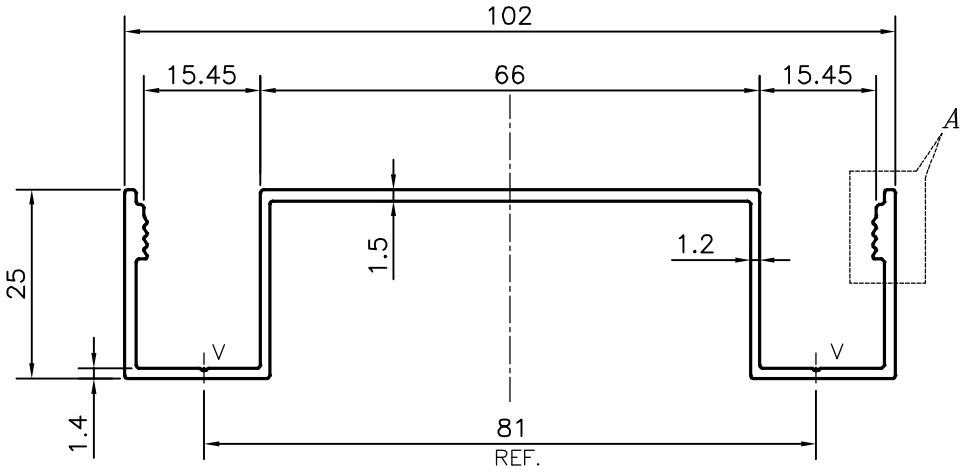


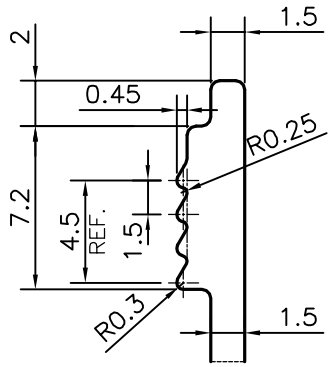


*DETAIL OF "A"*
SCALE 3:1

V = VEE GROOVE 0.4x90° (2 PLACES)

| | | | | |
|---|---|---|---|---|
| JINDAL<br>SYMBOL OF QUALITY<br>AN ISO 9001 COMPANY | *JINDAL ALUMINIUM LTD.*<br>*BANGALORE−560073 (INDIA)* | | NAME | DATE |
| | | DRAWN | *PARVESH* | 17−03−2016 |
| | | CHECKED | | |
| | | APPROVED | B. NATARAJ | 25−03−2016 |
| 1. ALL DIMENSIONS ARE IN mm.<br>2. ROUND OFF ALL SHARP CORNERS WITH 0.40 mm.<br>3. TOLERANCES WILL BE AS PER IS:3965−1981 , UNLESS OTHERWISE SPECIFIED | | SCALE | | 1:1 |
| | | AREA $mm^2$ | | 293.81 |
| | | PERIMETER mm. | | 399.276 |
| | | WEIGHT kg/m | | 0.793 |
| PARTY'S NAME | HYTEK INTERIOR PRODUCTS, BANGALORE | DRAWING No. | | SECTION No. |
| PARTY'S DRAWING No. | AS PER AUTOCAD DRAWING | P−15680 | | − |
| | | X1976 | | X1976 |
| ALLOY & TEMPER | HE9 WP | | | |
| DESCRIPTION | ARCHITECTURAL SECTION | | | |