P–15709
S4884
X2086

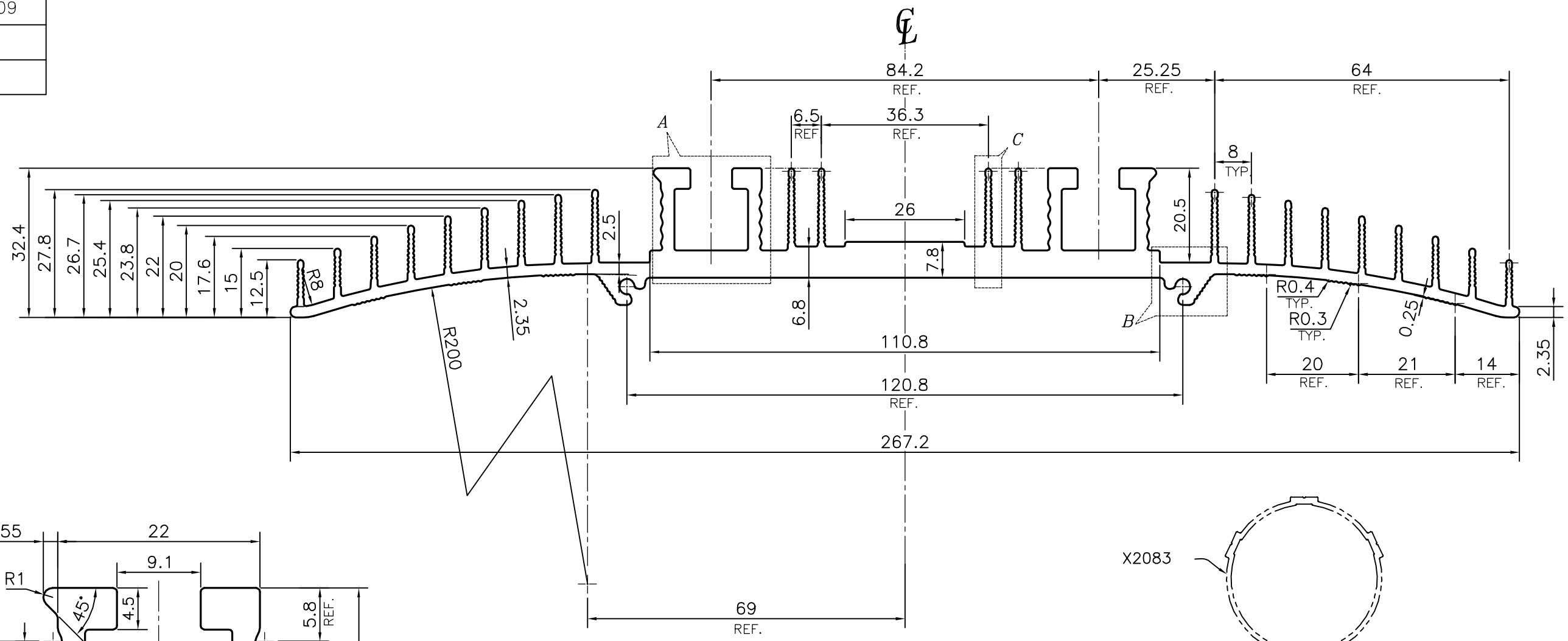

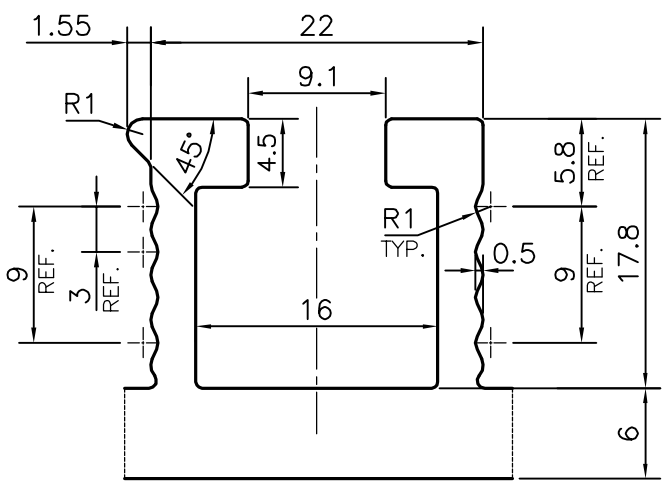

DETAIL OF "A"
SCALE 2:1

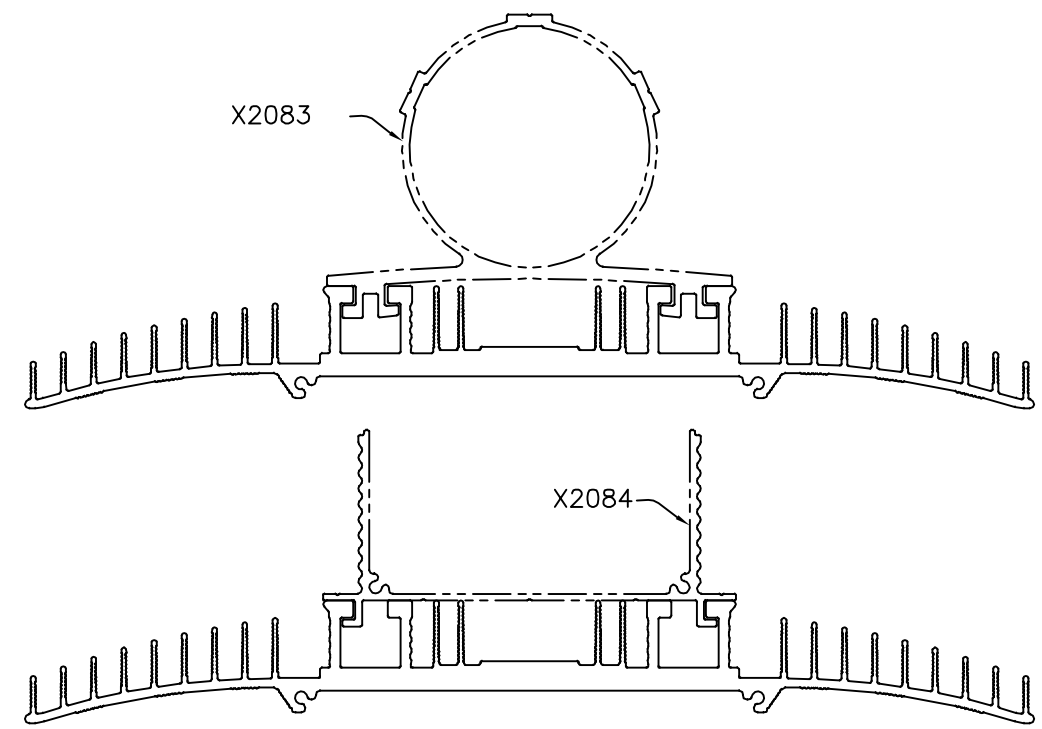

SCALE :– 0.5:1

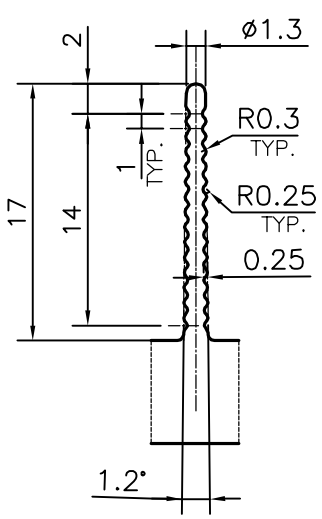

DETAIL OF "C"
SCALE 2:1

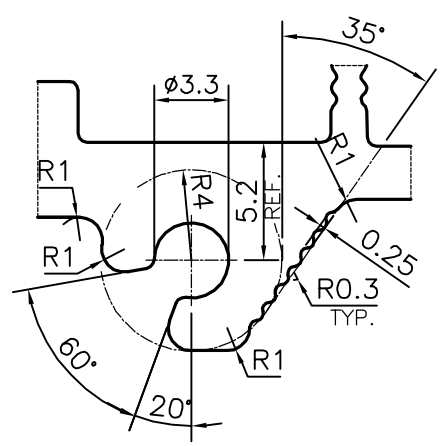

DETAIL OF "B"
SCALE 3:1

JINDAL SYMBOL OF QUALITY AN ISO 9001 COMPANY	*JINDAL ALUMINIUM LTD.* *BANGALORE–560073 (INDIA)*		NAME	DATE
		DRAWN	*PARVESH*	29–03–2016
		CHECKED		
		APPROVED	B. NATARAJ	25–03–2016
1. ALL DIMENSIONS ARE IN mm. 2. ROUND OFF ALL SHARP CORNERS WITH 0.40 mm. 3. TOLERANCES WILL BE AS PER IS:3965–1981 , UNLESS OTHERWISE SPECIFIED		SCALE		1:1
		AREA mm^2		1821.987
		PERIMETER mm.		1400.057
		WEIGHT kg/m		4.919
PARTY'S NAME	VYOMA LITS, BANGALORE	DRAWING No.		SECTION No.
PARTY'S DRAWING No.	AS PER REQUIREMENT	P–15709		–
ALLOY & TEMPER	HE9 WP	S4884		S4884
		X2086		X2086
DESCRIPTION	HEAT SINK SECTION			