P-14777

X2144

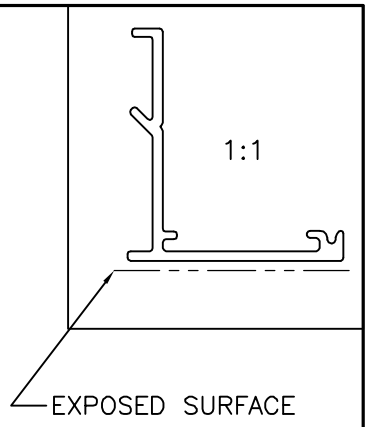

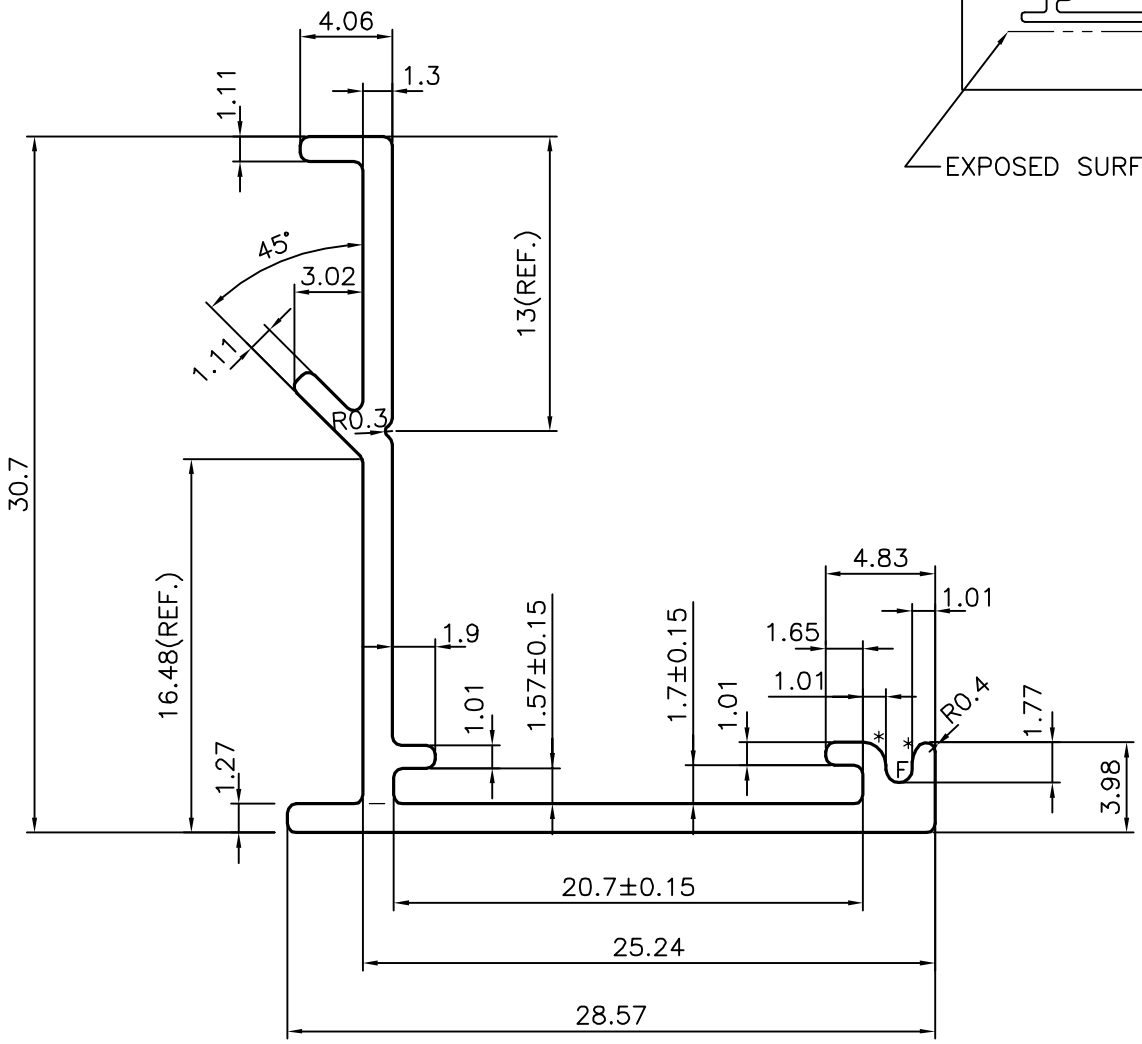

F= FULL RADIUS

* = 1.0 RADIUS (2 PLACES)

			NAME	DATE
SYMBOL OF QUALITY AN ISO 9001 COMPANY	*JINDAL ALUMINIUM LTD.* *BANGALORE-560073 (INDIA)*	DRAWN	J.P.KAUSHIK	17-06-2015
		CHECKED		
		APPROVED	*B.NATARAJA*	03-05-2017

1. ALL DIMENSIONS ARE IN mm.
2. ROUND OFF ALL SHARP CORNERS WITH 0.40 mm.
3. TOLERANCES WILL BE AS PER BS:EN-755-9 UNLESS OTHERWISE SPECIFIED

SCALE	3:1
AREA mm^2	91.872
PERIMETER mm.	141.957
WEIGHT kg/m	0.248

PARTY'S NAME	BADER AL MULLA & BROS. CO. W.L.L, KUWAIT
PARTY'S DRAWING No.	5049
ALLOY & TEMPER	6060 T6
DESCRIPTION	AIR GRILL SECTION

DRAWING No.	SECTION No.
P-14777	
X2144	X2144