P–17240
X2212

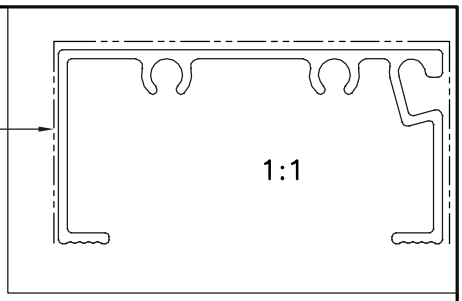

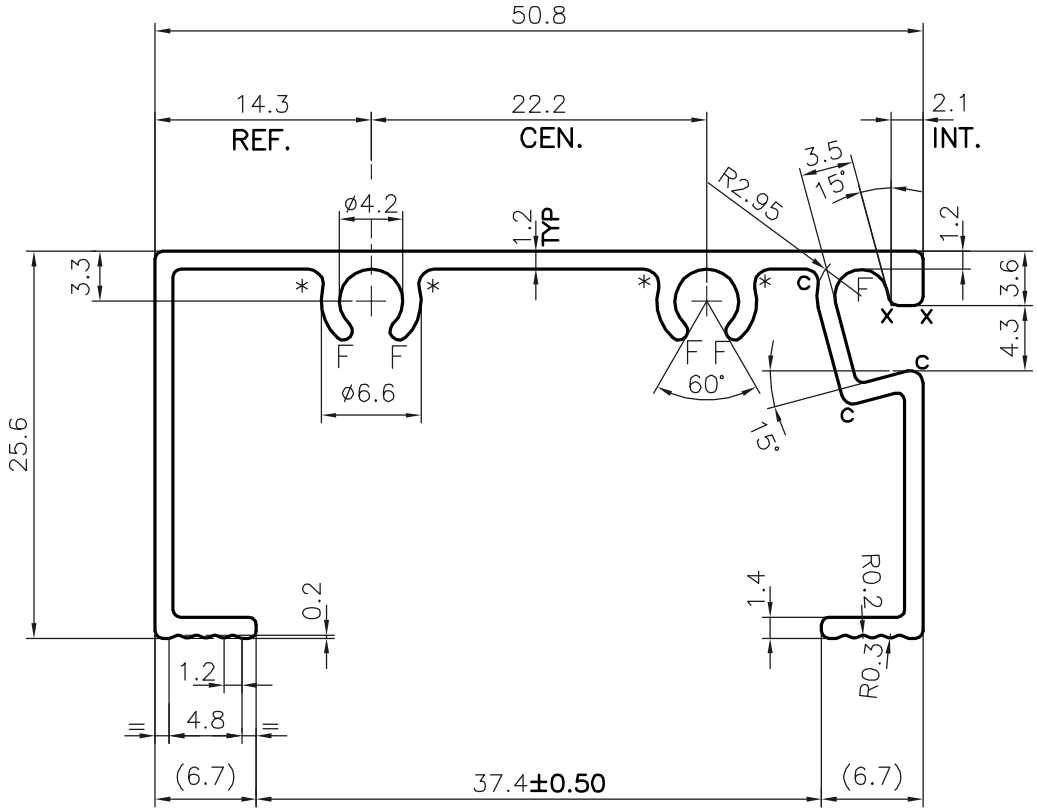

NOTE:–

DIMENSION 37.4 ADDED WITH TOLERANCE ±0.50.

TOLERANCE CHART CD = CIRCUMSCRIBING CIRCLE

CD≤100	100<CD≤200	200<CD<300	300<CD<500
UPTO 10mm – ±0.25	±0.30	±0.35	±0.40
10.0 –25.0 – ±0.30	±0.40	±0.50	±0.60
25.0 –50.0 – ±0.50	±0.60	±0.80	±0.90
50.0 –100.0 – ±0.70	±0.90	±1.10	±1.30
100 – 150 – –	±1.10	±1.30	±1.50
150 – 200 – –	±1.3	±1.50	±1.80
200 – 300 – –	–	±1.70	±2.10
300 – 450 – –	–	–	±2.80

x = 0.6 RADIUS (2 PLACES)
c = 0.8 RADIUS (3 PLACES)
* = 1.0 RADIUS (4 PLACES)
F = FULL RADIUS (5 PLACES)

JINDAL
SYMBOL OF QUALITY
AN ISO 9001 COMPANY

JINDAL ALUMINIUM LTD.
BANGALORE–560073 (INDIA)

	NAME	DATE
DRAWN	J.P.KAUSHIK	08–06–2017
CHECKED		
APPROVED		

1. ALL DIMENSIONS ARE IN mm.
2. ROUND OFF ALL SHARP CORNERS WITH 0.50 mm.
3. TOLERANCES WILL BE AS PER BS:EN–755–9 , UNLESS OTHERWISE SPECIFIED

SCALE	2:1
AREA mm^2	173.75
PERIMETER mm.	266.614
WEIGHT kg/m	0.469

PARTY'S NAME	A–1 ALUMINIUM INC, USA
PARTY'S DRAWING No.	KE 10650–STYLE D
ALLOY & TEMPER	6063 T5
DESCRIPTION	MISC. SECTION

DRAWING No.	SECTION No.
P–17240	–
X2212	X2212