P-17211-1
X2254

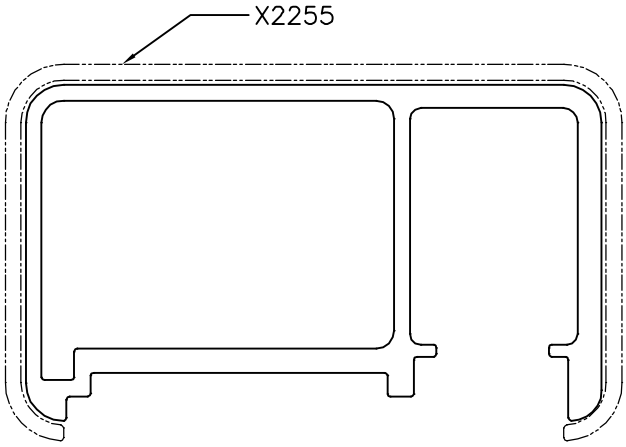

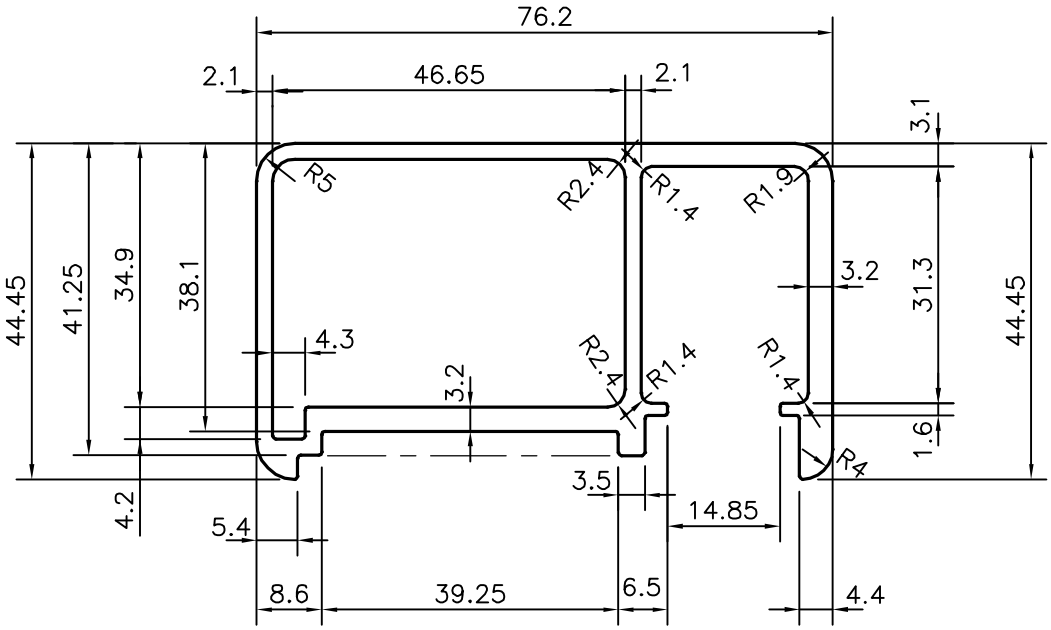

TOLERANCE CHART CD = CIRCUMSCRIBING CIRCLE

CD≤100	100<CD≤200	200<CD<300	300<CD<500
UPTO 10mm – ±0.25	±0.30	±0.35	±0.40
10.0 –25.0 – ±0.30	±0.40	±0.50	±0.60
25.0 –50.0 – ±0.50	±0.60	±0.80	±0.90
50.0 –100.0 – ±0.70	±0.90	±1.10	±1.30
100 – 150 – –	±1.10	±1.30	±1.50
150 – 200 – –	±1.3	±1.50	±1.80
200 – 300 – –	–	±1.70	±2.10
300 – 450 – –	–	–	±2.80

JINDAL

SYMBOL OF QUALITY
AN ISO 9001 COMPANY

JINDAL ALUMINIUM LTD.

BANGALORE–560073 (INDIA)

	NAME	DATE
DRAWN	J.P.KAUSHIK	14–10–2017
CHECKED		
APPROVED	*B.NATARAJA*	23–10–2017

1. ALL DIMENSIONS ARE IN mm.
2. ROUND OFF ALL SHARP CORNERS WITH 0.40 mm.
3. TOLERANCES WILL BE AS PER BS:EN–755–9 UNLESS OTHERWISE SPECIFIED

SCALE	1:1
AREA mm^2	665.232
PERIMETER mm.	331.823
WEIGHT kg/m	1.796

PARTY'S NAME	PROSOURCE INDL. SOLUTIONS INC., CANADA
PARTY'S DRAWING No.	AS PER DRAWING–HD OFFSET TOP
ALLOY & TEMPER	6063 T5
DESCRIPTION	MISC. SECTION

DRAWING No.	SECTION No.
P–17211–1	–
X2254	X2254