P−17578
X2268

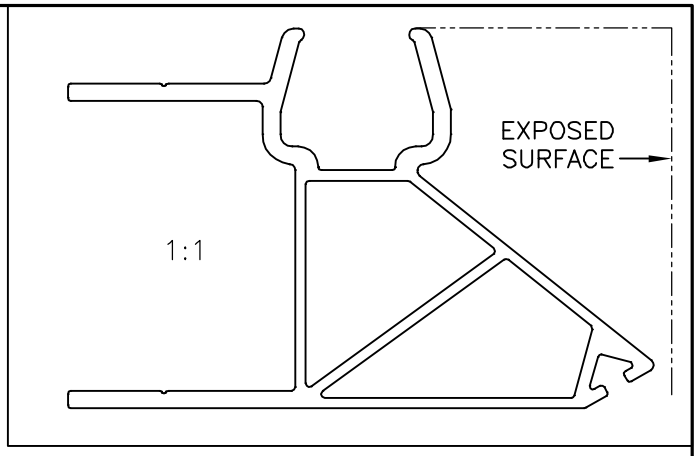

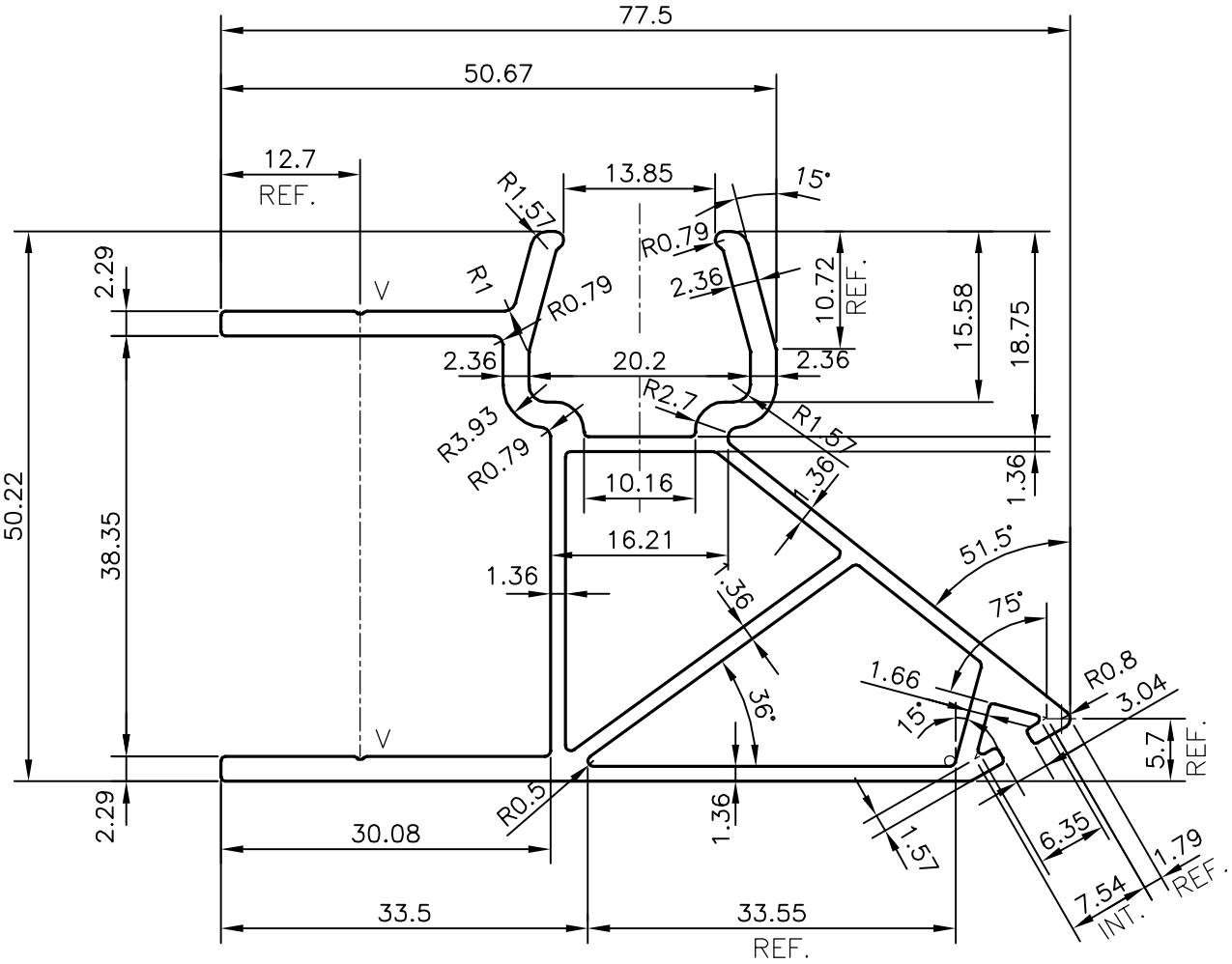

V = V GROOVE 0.30x90° (2 PLACES)
UNSPECIFIED RADIUS 0.50 mm

			NAME	DATE
JINDAL SYMBOL OF QUALITY AN ISO 9001 COMPANY	*JINDAL ALUMINIUM LTD.* *BANGALORE−560073 (INDIA)*	DRAWN	J.P.KAUSHIK	20−10−2017
		CHECKED		
		APPROVED	*B.NATARAJA*	26−10−2017

1. ALL DIMENSIONS ARE IN mm.
2. ROUND OFF ALL SHARP CORNERS WITH 0.40 mm.
3. TOLERANCES WILL BE AS PER BS:EN−755−9 , UNLESS OTHERWISE SPECIFIED

SCALE	1.5:1
AREA mm^2	480
PERIMETER mm.	346.989
WEIGHT kg/m	1.296

PARTY'S NAME	UNIVERSAL FABRICATING−CANADA
PARTY'S DRAWING No.	AS PER AutoCAD DRAWING−GL−ES10337−2
ALLOY & TEMPER	6063 T6
DESCRIPTION	VENT SEAL SECTION

DRAWING No.	SECTION No.
P−17578	−
X2268	X2268