P−17579
X2269

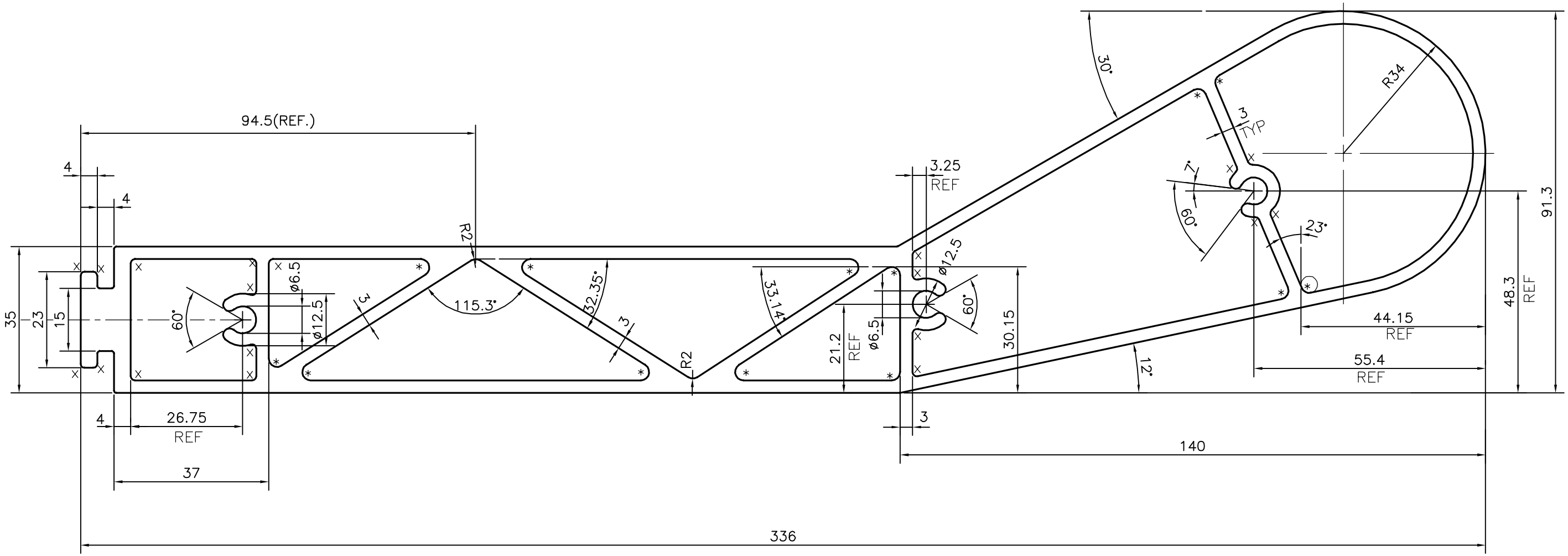

UNSPECIFIED RADIUS 0.5 mm

x = 1.0 RADIUS (15 PLACES)
* = 2.0 RADIUS (15 PLACES)

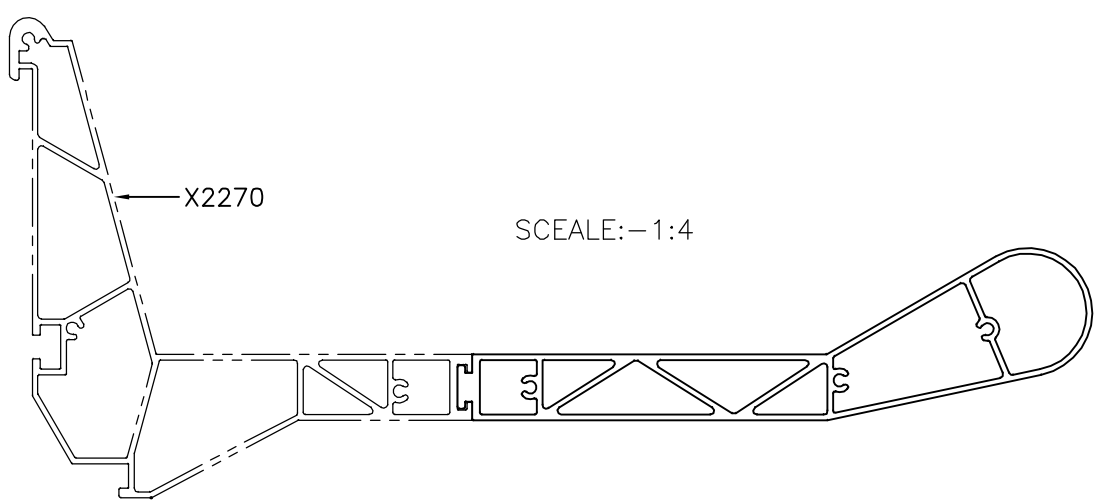

SCEALE:−1:4

TOLERANCES ON OVERALL WIDTHS & WIDTHS ACROSS FLATS OF BARS, & REGULAR SECTIONS			
UPTO 6.40mm − ±0.20 UPTO 10.0mm − ±0.23 UPTO 12.0mm − ±0.25 UPTO 16.0mm − ±0.28 UPTO 25.0mm − ±0.30	UPTO 32.0mm − ±0.38 UPTO 50.0mm − ±0.46 UPTO 60.0mm − ±0.53 UPTO 80.0mm − ±0.69 UPTO 100.0mm − ±0.75	UPTO 120.0mm − ±0.85 UPTO 160.0mm − ±1.02 UPTO 200.0mm − ±1.14 UPTO 250.0mm − ±1.40 UPTO 300.0mm − ±1.65	UPTO 320.00mm − ±1.70

JINDAL
SYMBOL OF QUALITY
AN ISO 9001 COMPANY

JINDAL ALUMINIUM LTD.
BANGALORE−560073 (INDIA)

1. ALL DIMENSIONS ARE IN mm.
2. ROUND OFF ALL SHARP CORNERS WITH 0.40 mm.
3. TOLERANCES WILL BE AS PER, IS:6477−1983 UNLESS OTHERWISE SPECIFIED

	NAME	DATE
DRAWN	J.P.KAUSHIK	20−10−2017
CHECKED		
APPROVED	B.NATARAJA	26−10−2017
SCALE		1:1
AREA mm^2		3413.961
PERIMETER mm.		775.947
WEIGHT kg/m		9.218

PARTY'S NAME	HANSPAL TRADERS, KAPURTHALA
PARTY'S DRAWING No.	AS PER DRAWING
ALLOY & TEMPER	63400 WP
DESCRIPTION	RAIL COACH SECTION

DRAWING No.	SECTION No.
P−17579	−
X2269	X2269