P−17606
X2295

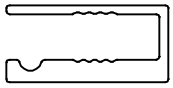

1:1

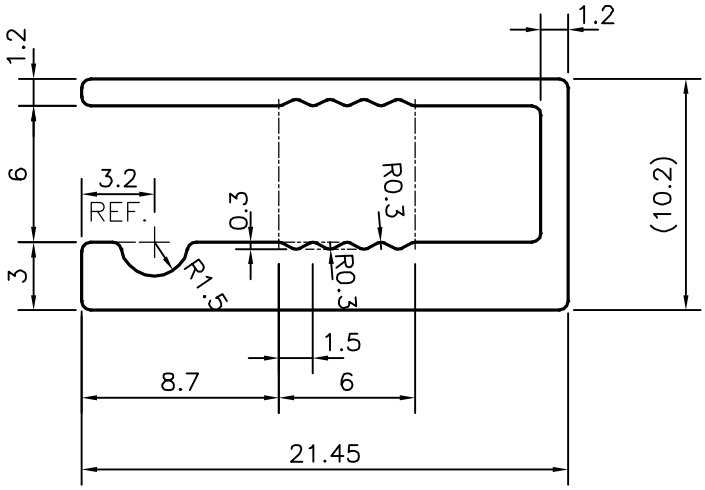

TOLERANCE CHART CD = CIRCUMSCRIBING CIRCLE

CD≤100	100<CD≤200	200<CD<300	300<CD<500
UPTO 10mm − ±0.25	±0.30	±0.35	±0.40
10.0 −25.0 − ±0.30	±0.40	±0.50	±0.60
25.0 −50.0 − ±0.50	±0.60	±0.80	±0.90
50.0 −100.0 − ±0.70	±0.90	±1.10	±1.30
100 − 150 − −	±1.10	±1.30	±1.50
150 − 200 − −	±1.3	±1.50	±1.80
200 − 300 − −	−	±1.70	±2.10
300 − 450 − −	−	−	±2.80

JINDAL

SYMBOL OF QUALITY
AN ISO 9001 COMPANY

JINDAL ALUMINIUM LTD.

BANGALORE−560073 (INDIA)

	NAME	DATE
DRAWN	J.P.KAUSHIK	02−11−2017
CHECKED		
APPROVED	B.NATARAJA	25−01−2018

1. ALL DIMENSIONS ARE IN mm.
2. ROUND OFF ALL SHARP CORNERS WITH 0.40 mm.
3. TOLERANCES WILL BE AS PER BS:EN−755−9 UNLESS OTHERWISE SPECIFIED

SCALE	3:1
AREA mm^2	91.77
PERIMETER mm.	104.912
WEIGHT kg/m	0.248

PARTY'S NAME	PROSOURCE INDL. SOLUTIONS INC., CANADA
PARTY'S DRAWING No.	AS PER DRAWING
ALLOY & TEMPER	6063 T5
DESCRIPTION	MISC. SECTION

DRAWING No.	SECTION No.
P−17606	−
X2295	X2295