P–18289–3

X2361

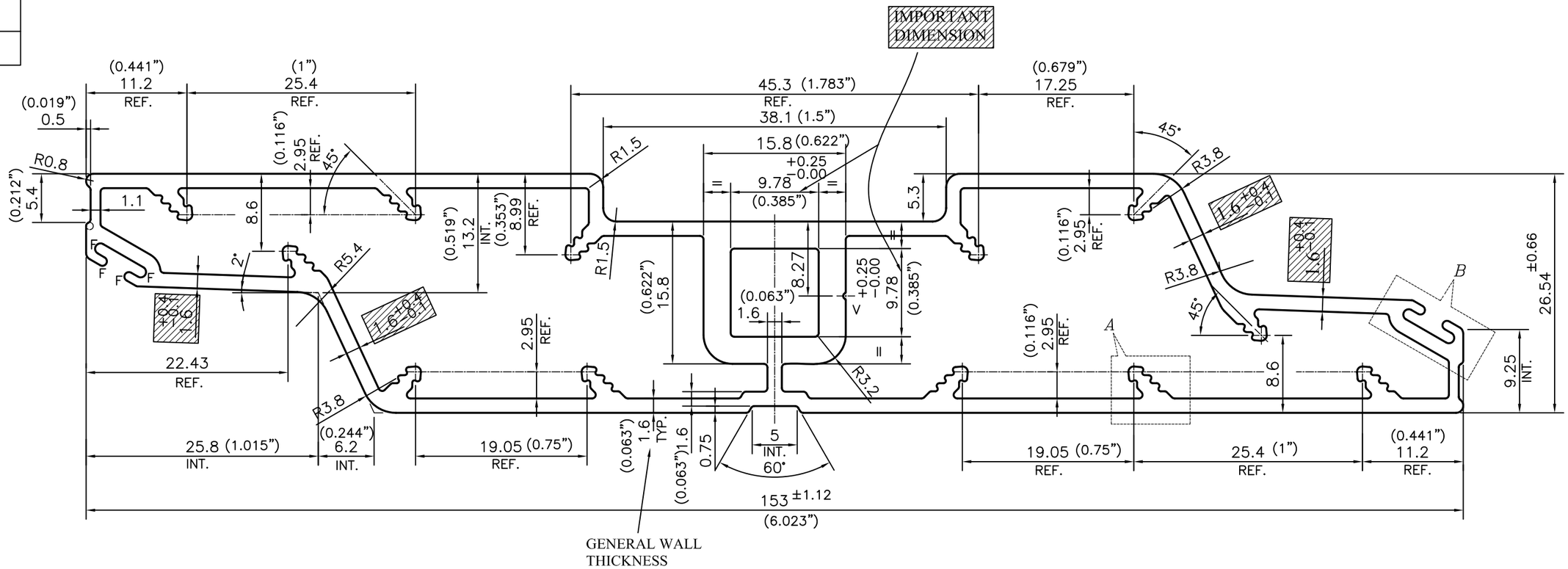

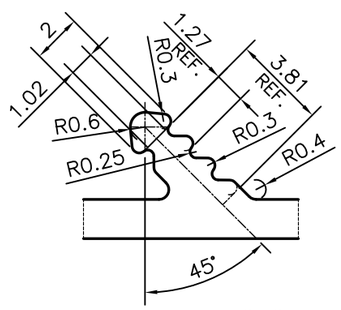

DETAIL OF "A"
SCALE 4:1

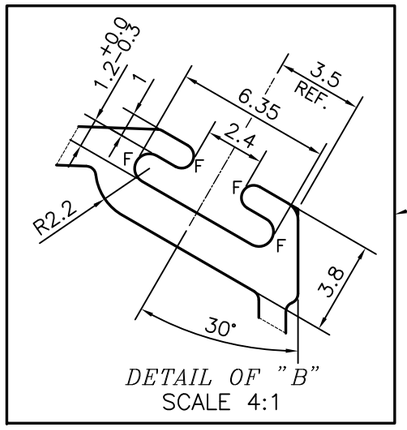

DETAIL OF "B"
SCALE 4:1

TO CHECK WITH GAUGE

V = VEE GROOVE 0.3x90° (1 PLACE)
F = FULL RADIUS (8 PLACES)

TOLERANCE CHART CD = CIRCUMSCRIBING CIRCLE

DIMENSION	CD≤100	100<CD≤200	200<CD≤300	300<CD≤500
UPTO 10mm	±0.25	±0.30	±0.35	±0.40
10.0 –25.0	±0.30	±0.40	±0.50	±0.60
25.0 –50.0	±0.50	±0.60	±0.80	±0.90
50.0 –100	±0.70	±0.90	±1.10	±1.30
100 – 150	–	±1.10	±1.30	±1.50
150 – 200	–	±1.3	±1.50	±1.80
200 – 300	–	–	±1.70	±2.10
300 – 450	–	–	–	±2.80

EXPOSED SURFACE

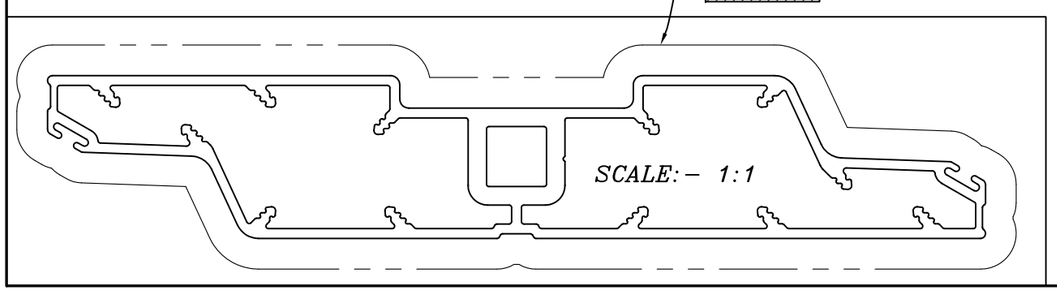

JINDAL
SYMBOL OF QUALITY
AN ISO 9001 COMPANY

JINDAL ALUMINIUM LTD.
BANGALORE–560073 (INDIA)

1. ALL DIMENSIONS ARE IN mm.
2. ROUND OFF ALL SHARP CORNERS WITH 0.40 mm.
3. TOLERANCES WILL BE AS PER IS:6477–1983 , UNLESS OTHERWISE SPECIFIED

	NAME	DATE
DRAWN	PARVESH	04–07–2018
CHECKED		
APPROVED	B.NATARAJA	06–09–2018

SCALE	2:1
AREA mm²	786.416
PERIMETER mm.	370.668
WEIGHT kg/m	2.123

DRAWING No.	SECTION No.
P–18289–3	–
X2361	X2361

PARTY'S NAME	VENTEX INC, CANADA
PARTY'S DRAWING No.	AH–69937–1
ALLOY & TEMPER	6063 T6
DESCRIPTION	MISC SECTION