P–18797

X2411

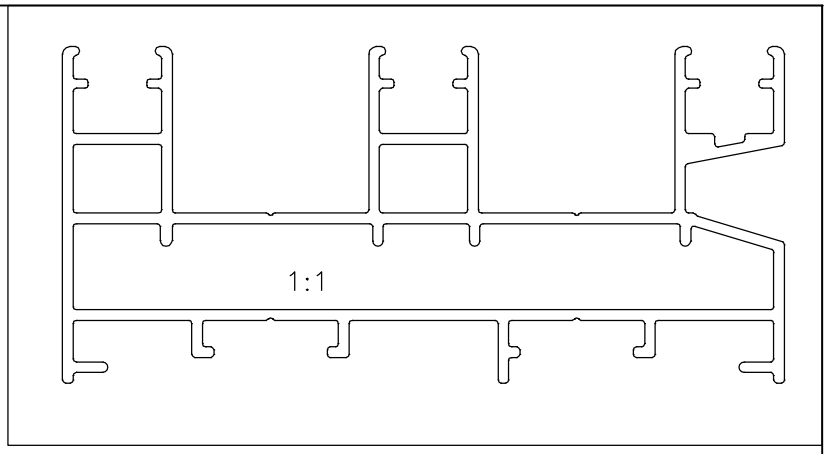

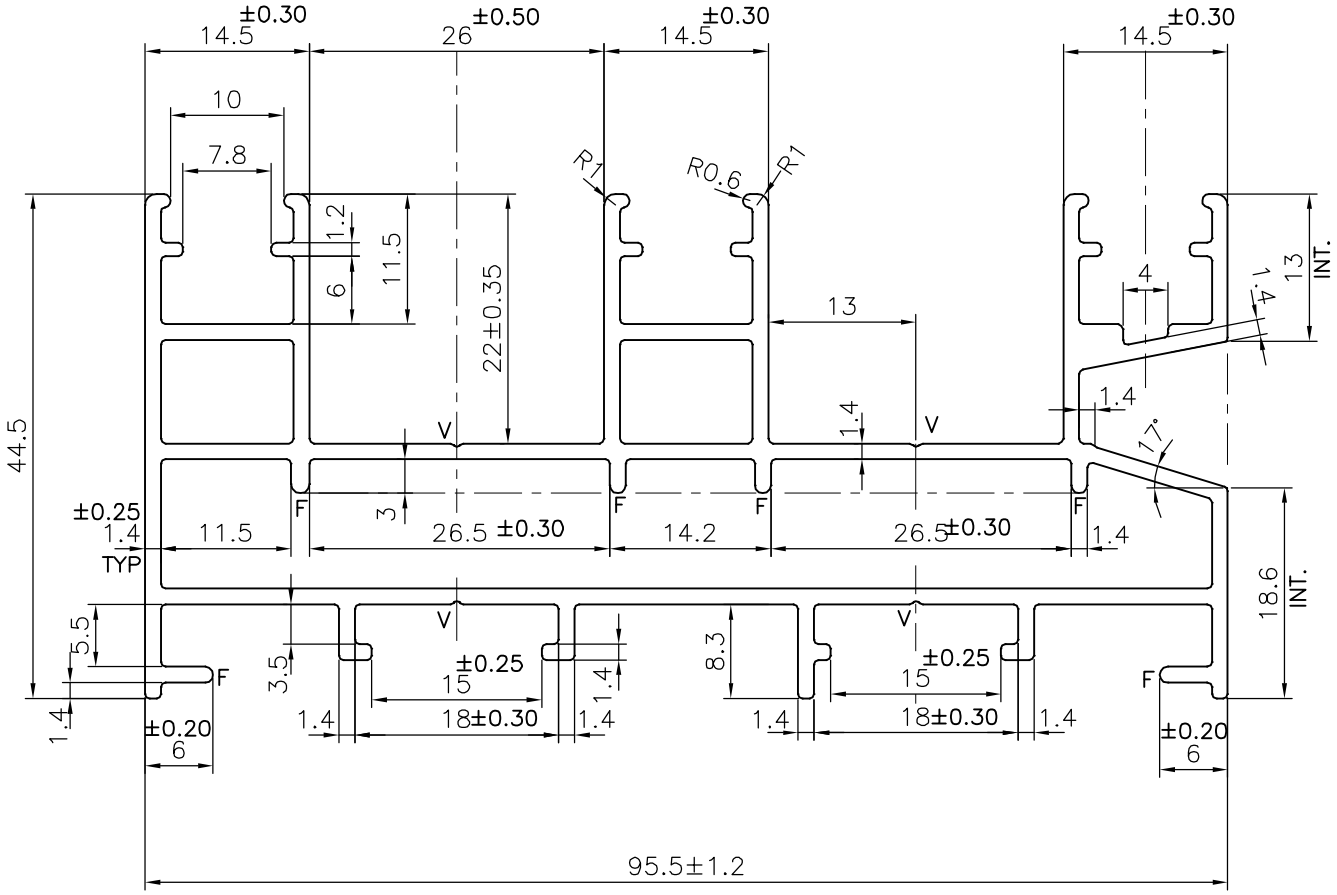

V = V GROOVE 0.3x90° (4 PLACES)
F = FULL RADIUS (6 PLACES)

			NAME	DATE
SYMBOL OF QUALITY AN ISO 9001 COMPANY	*JINDAL ALUMINIUM LTD.* *BANGALORE–560073 (INDIA)*	DRAWN	J.P.KAUSHIK	26–10–2018
		CHECKED		
		APPROVED	*B.NATARAJA*	26–10–2018

1. ALL DIMENSIONS ARE IN mm.
2. ROUND OFF ALL SHARP CORNERS WITH 0.40 mm.
3. TOLERANCES WILL BE AS PER IS:6477–1983 UNLESS OTHERWISE SPECIFIED

SCALE	1.5:1
AREA mm^2	639.631
PERIMETER mm.	567.022
WEIGHT kg/m	1.727

PARTY'S NAME	MAHARASHTRA ALUMINIUM CENTRE, BHIWANDI
PARTY'S DRAWING No.	AS PER DRAWING
ALLOY & TEMPER	6063 T6
DESCRIPTION	WINDOW SECTION

DRAWING No.	SECTION No.
P–18797	
X2411	X2411