| |
|---|
| P–18799 |
| X2413 |
| |

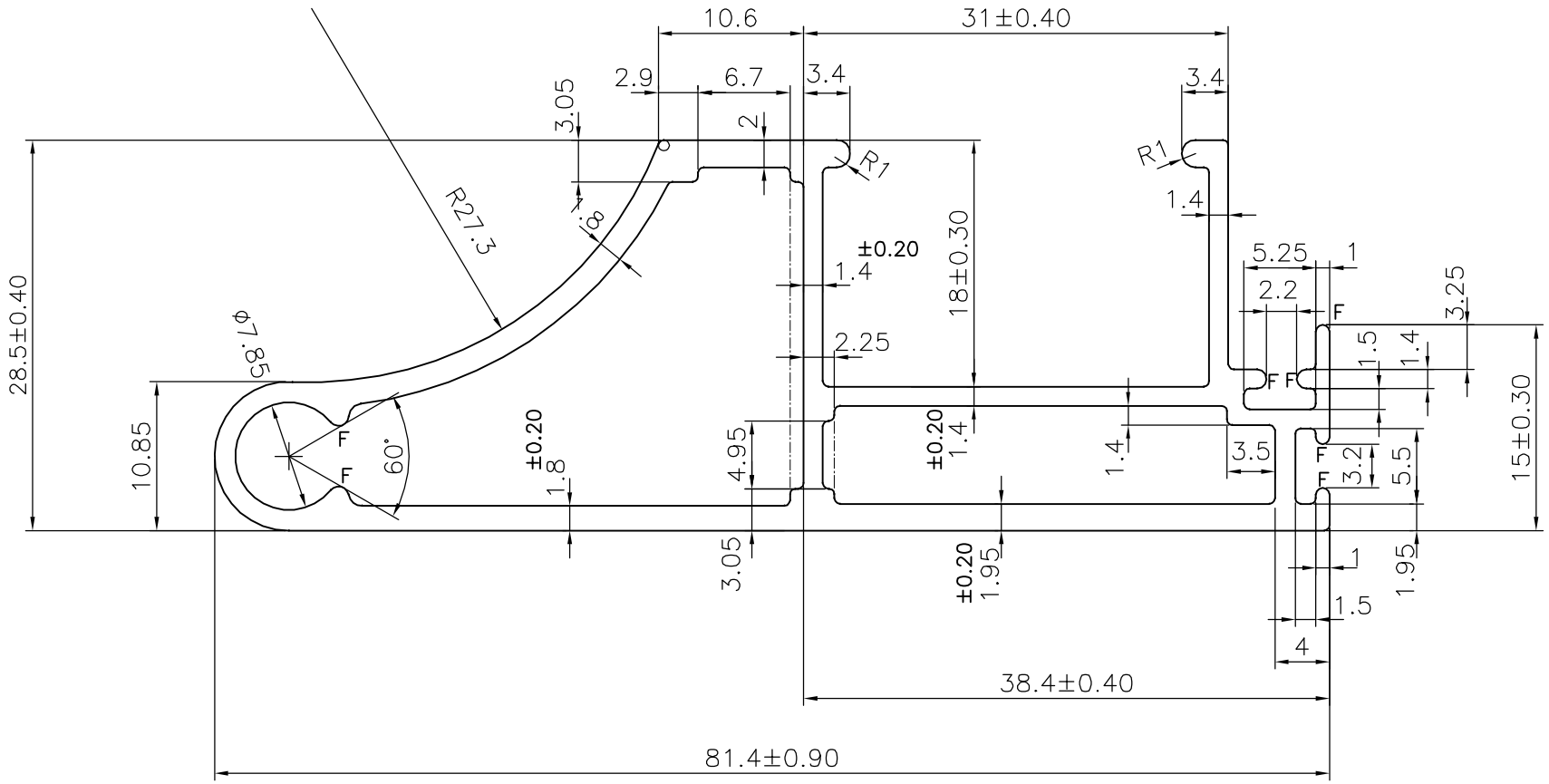


F = FULL RADIUS (6 PLACES)

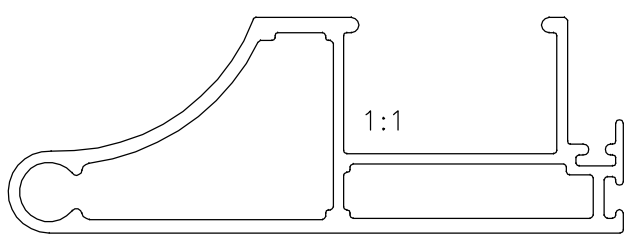


| | | | | |
|---|---|---|---|---|
| JINDAL SYMBOL OF QUALITY AN ISO 9001 COMPANY | *JINDAL ALUMINIUM LTD.* *BANGALORE–560073 (INDIA)* | | NAME | DATE |
| | | DRAWN | J.P.KAUSHIK | 26–10–2018 |
| | | CHECKED | | |
| | | APPROVED | *B.NATARAJA* | 26–10–2018 |
| 1. ALL DIMENSIONS ARE IN mm.<br>2. ROUND OFF ALL SHARP CORNERS WITH 0.40 mm.<br>3. TOLERANCES WILL BE AS PER IS:6477–1983 UNLESS OTHERWISE SPECIFIED | | SCALE | | 2:1 |
| | | AREA $mm^2$ | | 402.827 |
| | | PERIMETER mm. | | 269.98 |
| | | WEIGHT kg/m | | 1.088 |
| PARTY'S NAME | MAHARASHTRA ALUMINIUM CENTRE, BHIWANDI | DRAWING No. | | SECTION No. |
| PARTY'S DRAWING No. | AS PER DRAWING | P–18799 | | |
| ALLOY & TEMPER | 6063 T6 | X2413 | | X2413 |
| DESCRIPTION | WINDOW SECTION | | | |