P−18793
X2414

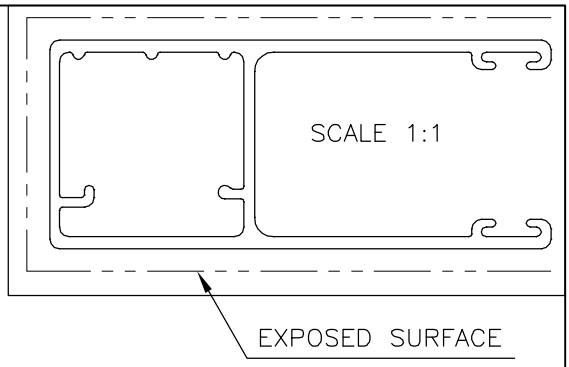

DETAIL OF "A"
SCALE 5:1

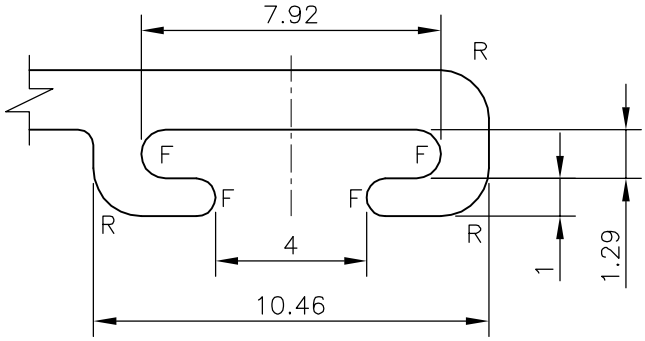

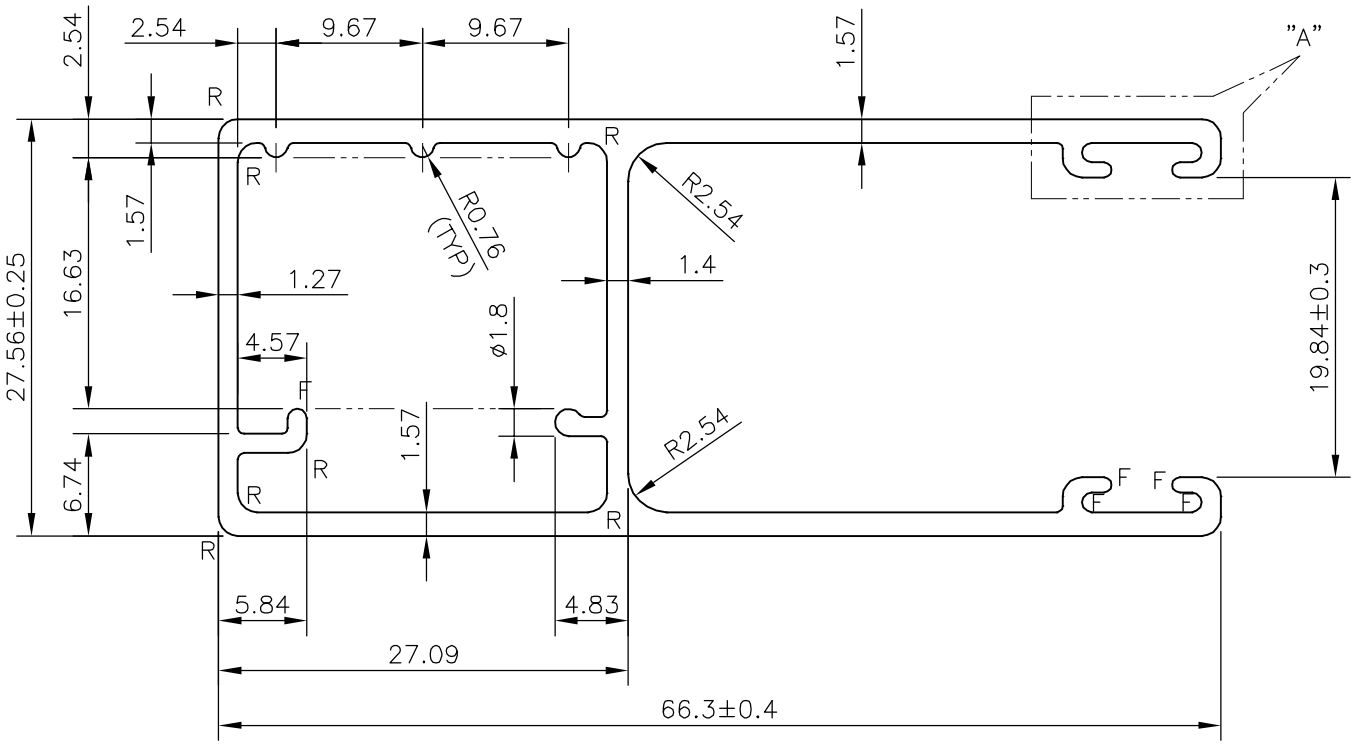

R = R1.27 mm (13 PLACES)
F = FULL RADIUS (9 PLACES)
UNSPECIFIED WALL THICKNESS = 1.27 mm

			NAME	DATE
SYMBOL OF QUALITY AN ISO 9001 COMPANY	*JINDAL ALUMINIUM LTD.* *BANGALORE−560073 (INDIA)*	DRAWN	J.P.KAUSHIK	25−10−2018
		CHECKED		
		APPROVED	*B.NATARAJA*	27−10−2018

1. ALL DIMENSIONS ARE IN mm.
2. ROUND OFF ALL SHARP CORNERS WITH 0.40 mm.
3. TOLERANCES WILL BE AS PER BS:EN−755−9 UNLESS OTHERWISE SPECIFIED

SCALE	2:1
AREA mm^2	310.808
PERIMETER mm.	289.324
WEIGHT kg/m	0.839

PARTY'S NAME	PERMACORP GROUP OF COMPANIES., CANADA
PARTY'S DRAWING No.	660−198
ALLOY & TEMPER	6063 T5
DESCRIPTION	MISC. SECTION

DRAWING No.	SECTION No.
P−18793	−
X2414	X2414