P–9912
X2453

DETAIL"A"
SCALE 5:1

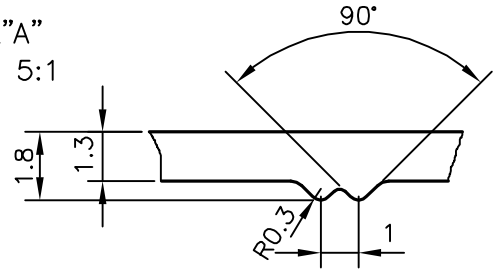

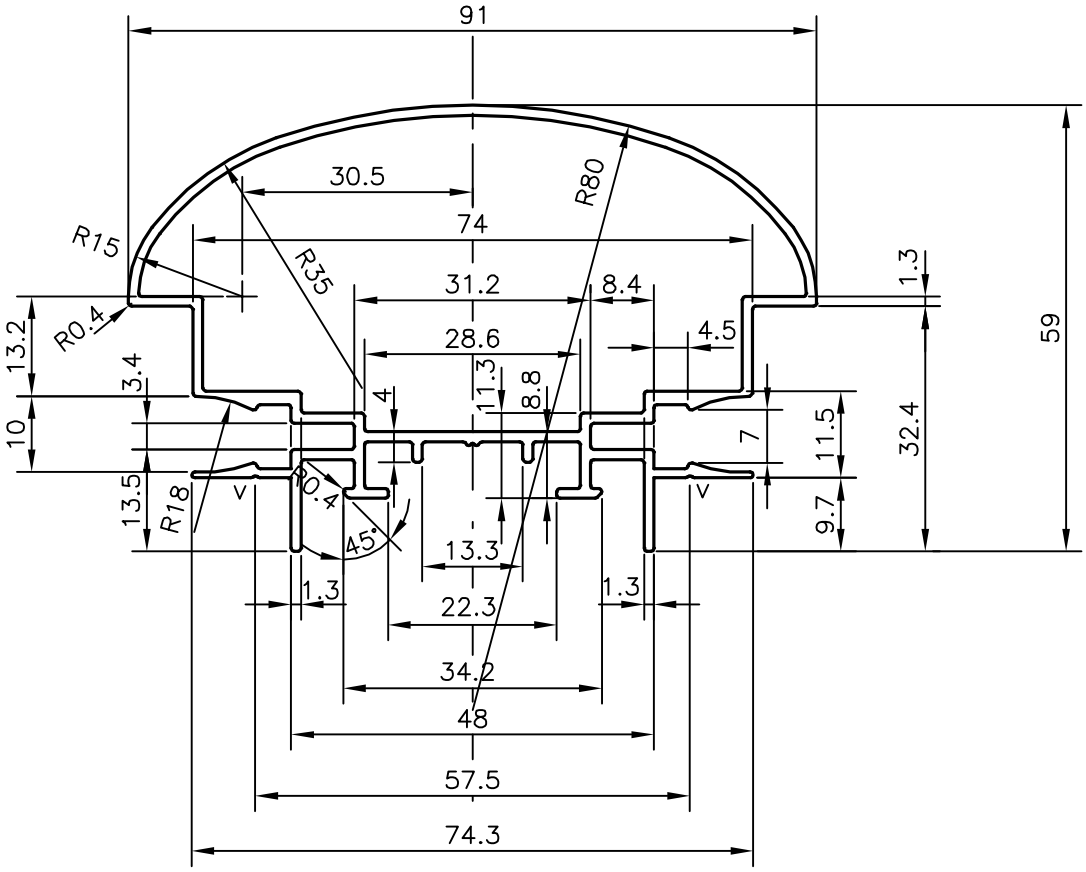

UNSPECIFIED WALL THICKNESS 1.3 mm
V = V GROOVE 0.3x90° (2 PLACES)
F = FULL RADIUS (2 PLACES)

JINDAL SYMBOL OF QUALITY AN ISO 9001 COMPANY	*JINDAL ALUMINIUM LTD.* *BANGALORE–560073 (INDIA)*		NAME	DATE
		DRAWN	J.P.KAUSHIK	23–03–2010
		CHECKED		
		APPROVED	J.N.RAI	13–12–2018
1. ALL DIMENSIONS ARE IN mm. 2. ROUND OFF ALL SHARP CORNERS WITH 0.40 mm. 3. TOLERANCES WILL BE AS PER BS:EN–755 UNLESS OTHERWISE SPECIFIED		SCALE		1:1
		AREA mm^2		440.76
		PERIMETER mm.		428.266
PARTY'S NAME	SLV, 30 RUE CLAUDE CHAPPE	WEIGHT kg/m		1.190
		DRAWING No.		SECTION No.
PARTY'S DRAWING No.	AS PER SAMPLE	P–9912		–
ALLOY & TEMPER	6063 T6	X2453		X2453
DESCRIPTION	MISC. SECTION			