P−19170
X2477

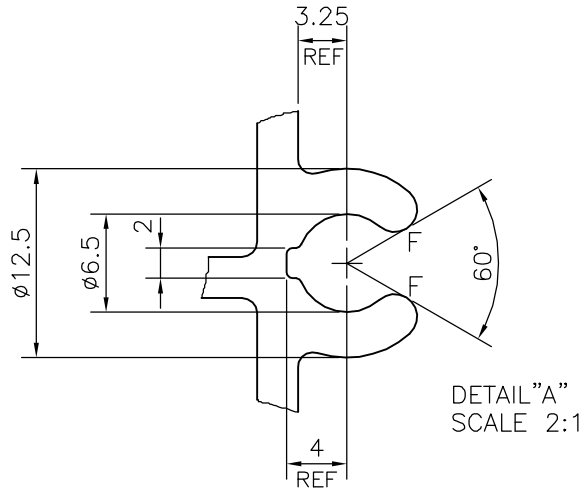

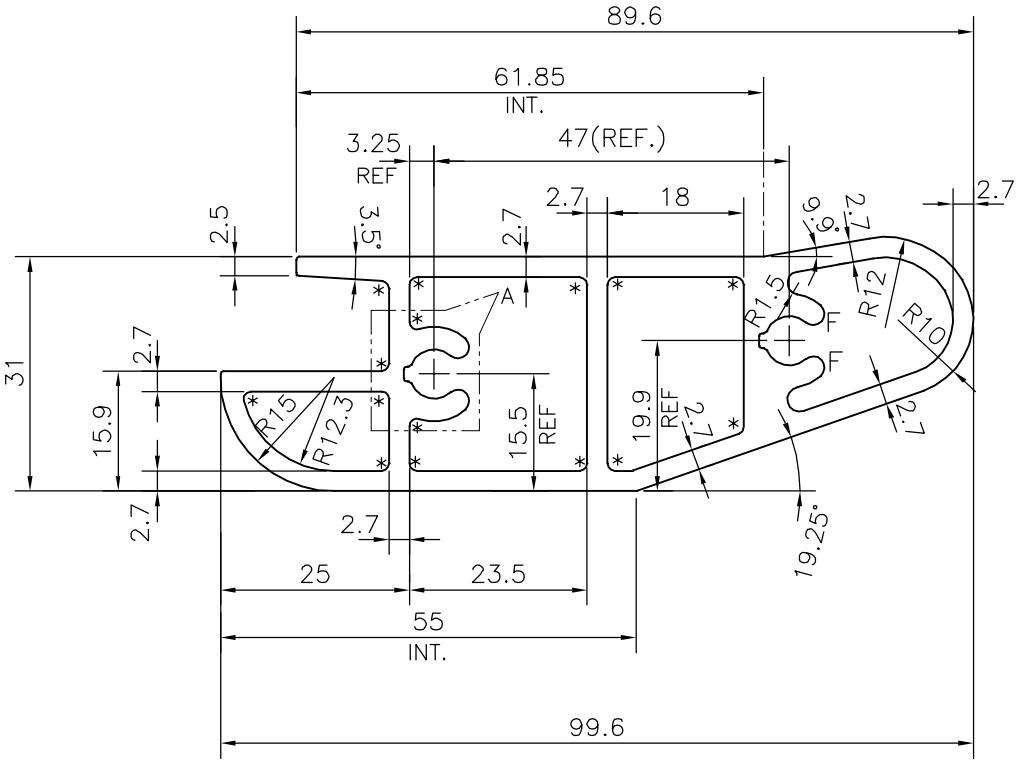

* = RADIUS 1.0 (15 PLACES)
F = FULL RADIUS (4 PLACES)

SYMBOL OF QUALITY AN ISO 9001 COMPANY	*JINDAL ALUMINIUM LTD.* *BANGALORE−560073 (INDIA)*		NAME	DATE
		DRAWN	J.P.KAUSHIK	19−02−2019
		CHECKED		
		APPROVED	*B.NATARAJA*	20−02−2019
1. ALL DIMENSIONS ARE IN mm. 2. ROUND OFF ALL SHARP CORNERS WITH 0.40 mm. 3. TOLERANCES WILL BE AS PER IS:6477−1983 , UNLESS OTHERWISE SPECIFIED		SCALE		1:1
		AREA mm^2		931.408
		PERIMETER mm.		260.488
		WEIGHT kg/m		2.515
PARTY'S NAME	HANSPAL TRADERS, KAPURTHALA	DRAWING No.		SECTION No.
PARTY'S DRAWING No.	HCP/LR/1001/A	P−19170		−
		X2477		X2477
ALLOY & TEMPER	63400 WP			
DESCRIPTION	FRONT PROFILE			