P−19146
X2482

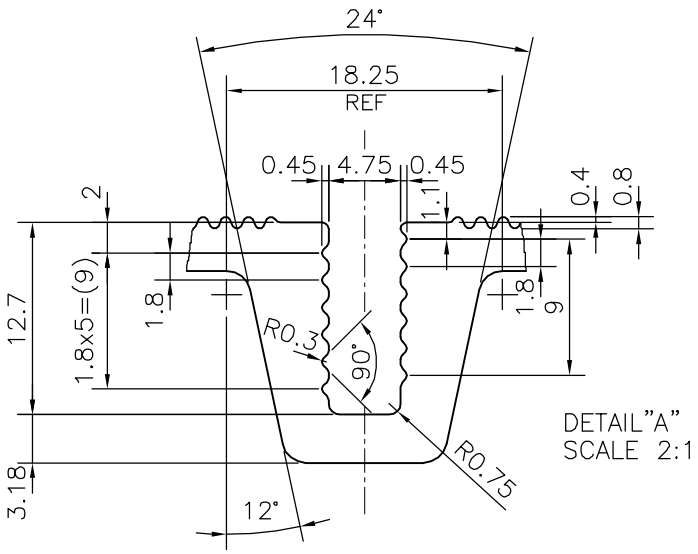

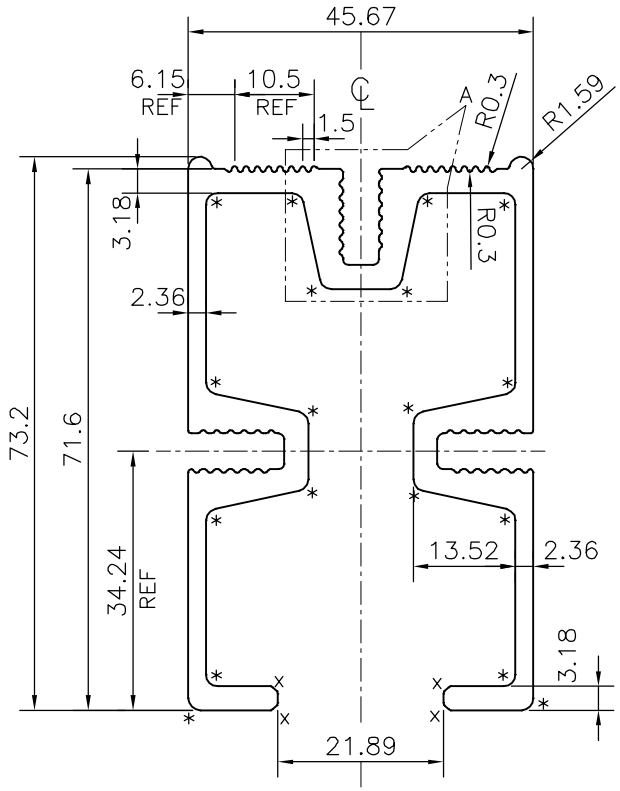

* = RADIUS1.57(18 PLACES)
x = CHAMFER 0.8x45°(4 PLACES)

JINDAL SYMBOL OF QUALITY AN ISO 9001 COMPANY	*JINDAL ALUMINIUM LTD.* *BANGALORE−560073 (INDIA)*		NAME	DATE
		DRAWN	J.P.KAUSHIK	14−02−2019
		CHECKED		
		APPROVED	B.NATARAJA	08−03−2019
1. ALL DIMENSIONS ARE IN mm. 2. ROUND OFF ALL SHARP CORNERS WITH 0.40 mm. 3. TOLERANCES WILL BE AS PER ANSI:H35.2−2009, UNLESS OTHERWISE SPECIFIED		SCALE		1:1
		AREA mm^2		856.93
		PERIMETER mm.		564.43
		WEIGHT kg/m		2.314
PARTY'S NAME	HMT LLC., USA	DRAWING No.		SECTION No.
PARTY'S DRAWING No.	42218 REV.1	P−19146		−
		X2482		X2482
ALLOY & TEMPER	6005A T6511			
DESCRIPTION	MISC. SECTION			