| | |
|---|---|
| P–20815 | |
| X2637 | |

GENERAL WALL THICKNESS = 1.7 mm
P = PIP 0.3x90°xR0.3 (14 PLACES)
V = VEE GROOVE 0.3x90°xR0.3 (3 PLACES)
F = FULL RADIUS (8 PLACE)

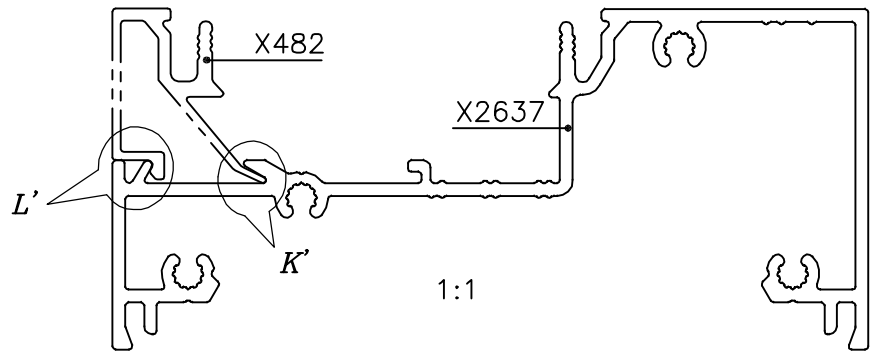


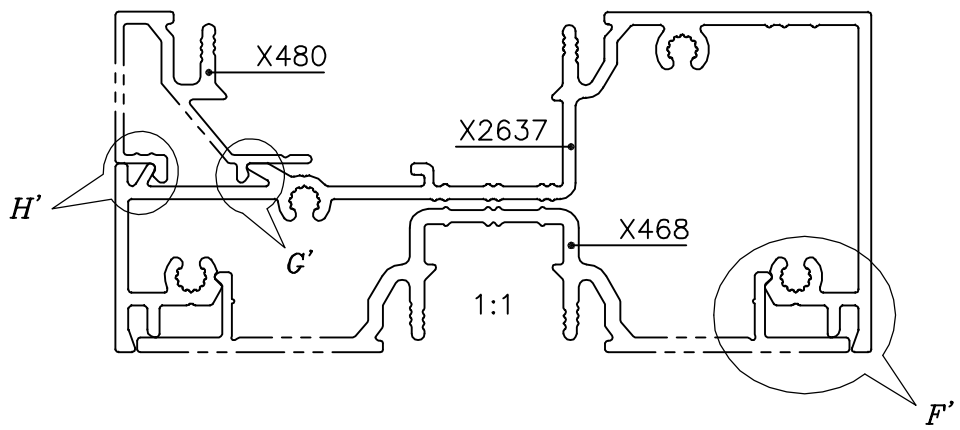


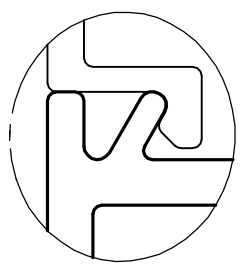

DETAIL–E
SCALE:–3:1

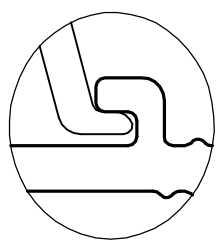

DETAIL–D
SCALE:–3:1

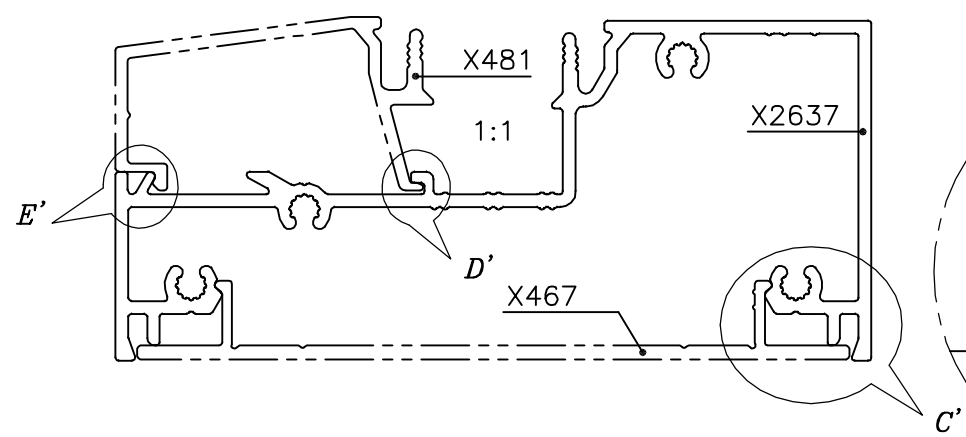


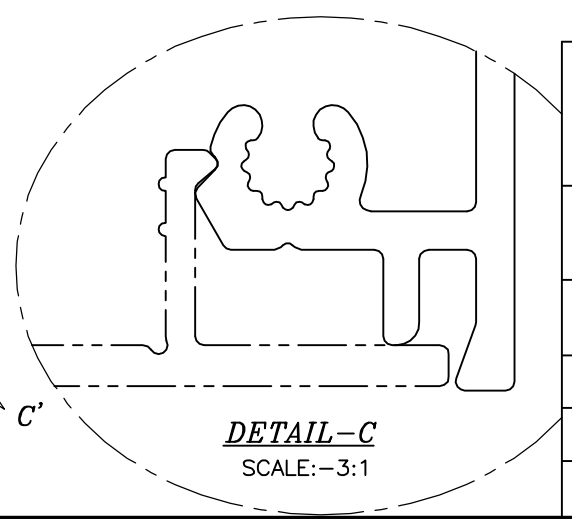

DETAIL–C
SCALE:–3:1

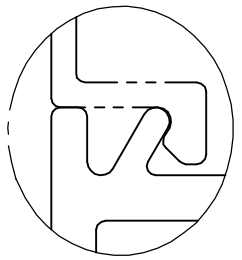

DETAIL–L
SCALE:–3:1

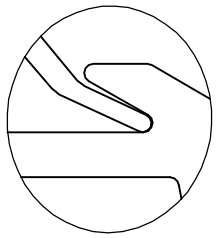

DETAIL–K
SCALE:–3:1

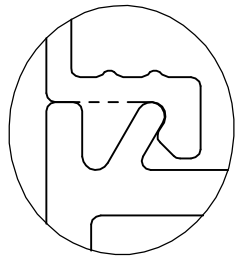

DETAIL–H
SCALE:–3:1

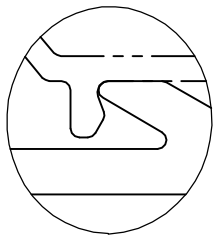

DETAIL–G
SCALE:–3:1

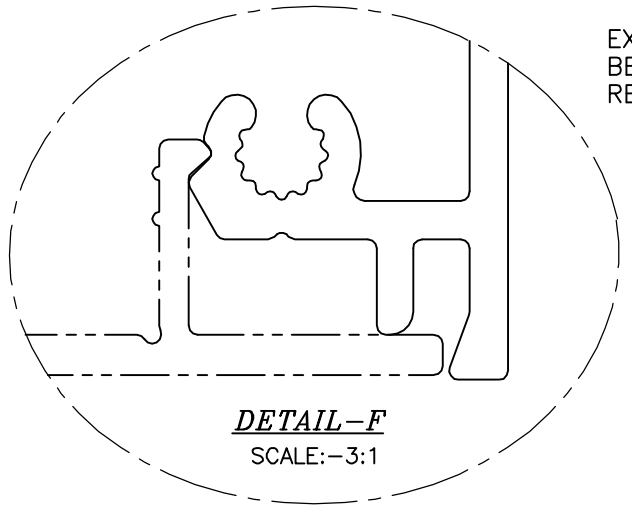

DETAIL–F
SCALE:–3:1

EXPOSED SURFACE
BETTER FINISH
REQUIRED

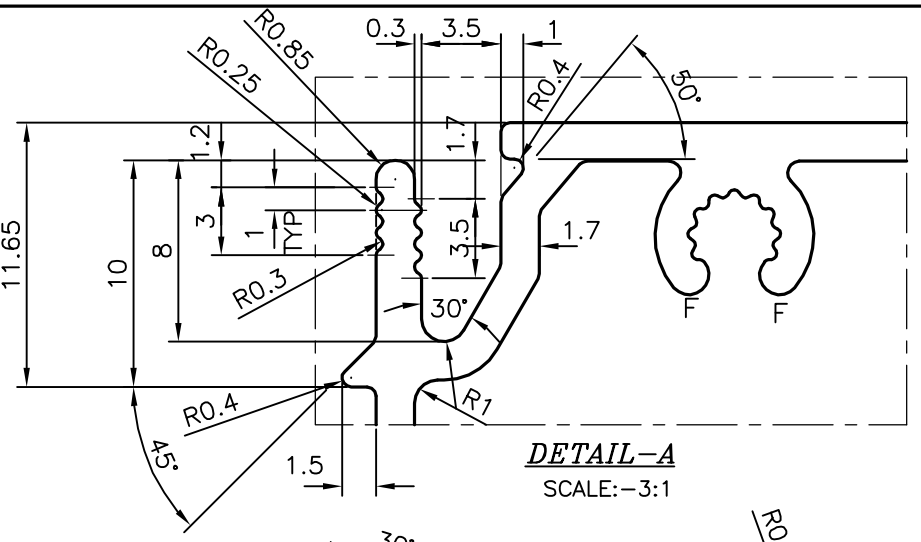


DETAIL–A
SCALE:–3:1

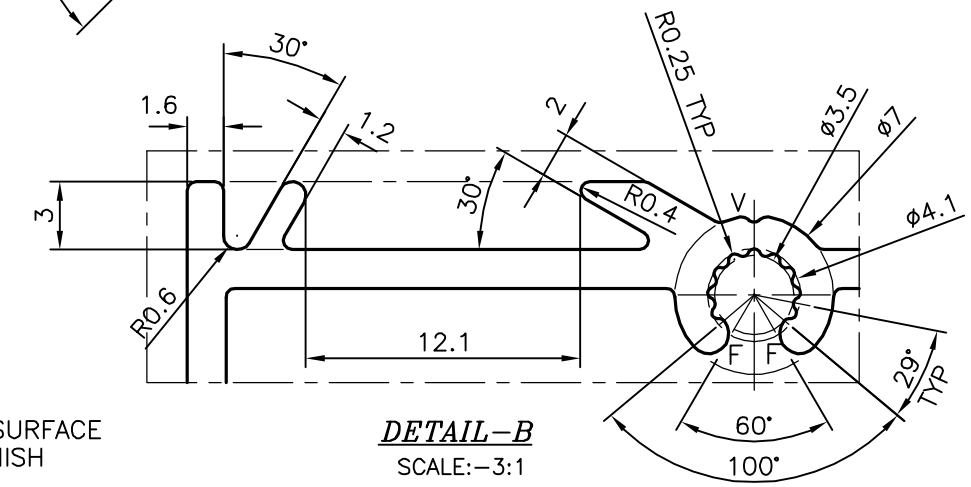


DETAIL–B
SCALE:–3:1

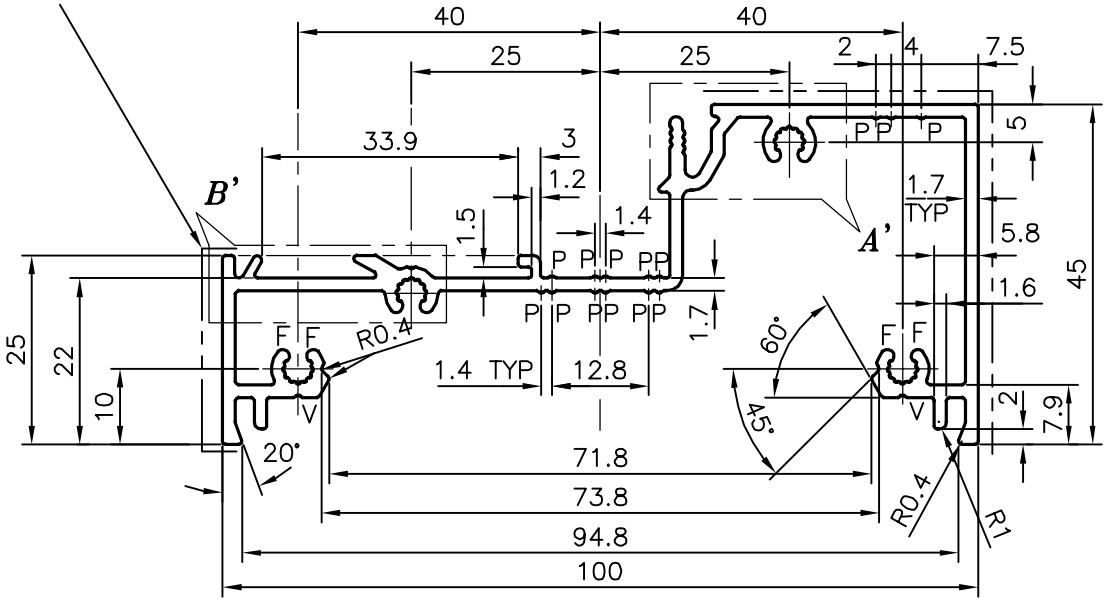


| | | | | |
|---|---|---|---|---|
| JINDAL SYMBOL OF QUALITY AN ISO 9001 COMPANY | JINDAL ALUMINIUM LTD. BANGALORE–560073 (INDIA) | | NAME | DATE |
| | | DRAWN | J.P.KAUSHIK | 24–02–2020 |
| | | CHECKED | | |
| | | APPROVED | B.NATARAJA | 27–02–2020 |
| 1. ALL DIMENSIONS ARE IN mm. 2. ROUND OFF ALL SHARP CORNERS WITH 0.40 mm. 3. TOLERANCES WILL BE AS PER BS:EN–755–9 UNLESS OTHERWISE SPECIFIED | | SCALE | | 1:1 |
| | | AREA mm² | | 481.439 |
| | | PERIMETER mm. | | 556.325 |
| | | WEIGHT kg/m | | 1.300 |
| PARTY'S NAME | P.D ALUMINIUM LTD., U.K. | DRAWING No. | | SECTION No. |
| PARTY'S DRAWING No. | LIGHTER OF X469(PD–2 LIGHT) | P–20815 | | – |
| ALLOY & TEMPER | 6063 T6 | X2637 | | X2637 |
| DESCRIPTION | MISC. SECTION | | | |