P−20935−1
X2648

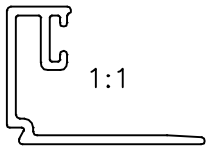

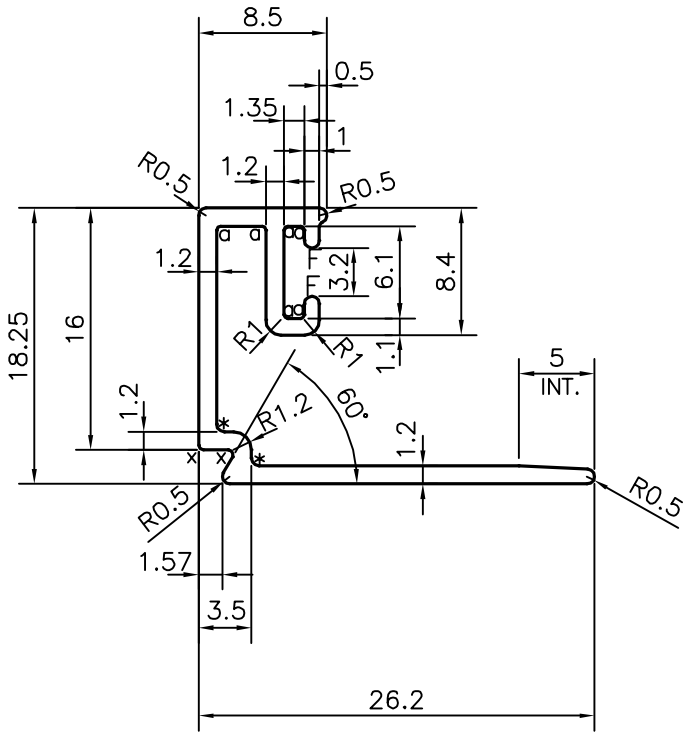

TOLERANCE CHART CD = CIRCUMSCRIBING CIRCLE

CD≤100	100<CD≤200	200<CD≤300	300<CD≤500
UPTO 10mm − ±0.25	±0.30	±0.35	±0.40
10.0 −25.0 − ±0.30	±0.40	±0.50	±0.60
25.0 −50.0 − ±0.50	±0.60	±0.80	±0.90
50.0 −100.0 − ±0.70	±0.90	±1.10	±1.30
100 − 150 − −	±1.10	±1.30	±1.50
150 − 200 − −	±1.3	±1.50	±1.80
200 − 300 − −	−	±1.70	±2.10
300 − 450 − −	−	−	±2.80

a = 0.25 RADIUS (6 PLACES)
x = 0.30 RADIUS (2 PLACES)
* = 0.50 RADIUS (2 PLACES)
F = FULL RADIUS (2 PLACES)

JINDAL
SYMBOL OF QUALITY
AN ISO 9001 COMPANY

JINDAL ALUMINIUM LTD.
BANGALORE−560073 (INDIA)

	NAME	DATE
DRAWN	J.P.KAUSHIK	09−05−2020
CHECKED		
APPROVED	B.NATARAJA	25−05−2020

1. ALL DIMENSIONS ARE IN mm.
2. ROUND OFF ALL SHARP CORNERS WITH 0.40 mm.
3. TOLERANCES WILL BE AS PER BS:EN−755−9 , UNLESS OTHERWISE SPECIFIED

SCALE	2:1
AREA mm^2	73.986
PERIMETER mm.	124.18
WEIGHT kg/m	0.200

PARTY'S NAME	PERFECT GLAZE, UNITED KINGDOM
PARTY'S DRAWING No.	B 08
ALLOY & TEMPER	6063 T6
DESCRIPTION	WINDOW SECTION

DRAWING No.	SECTION No.
P−20935−1	−
X2648	X2648