P–20952–1
X2654

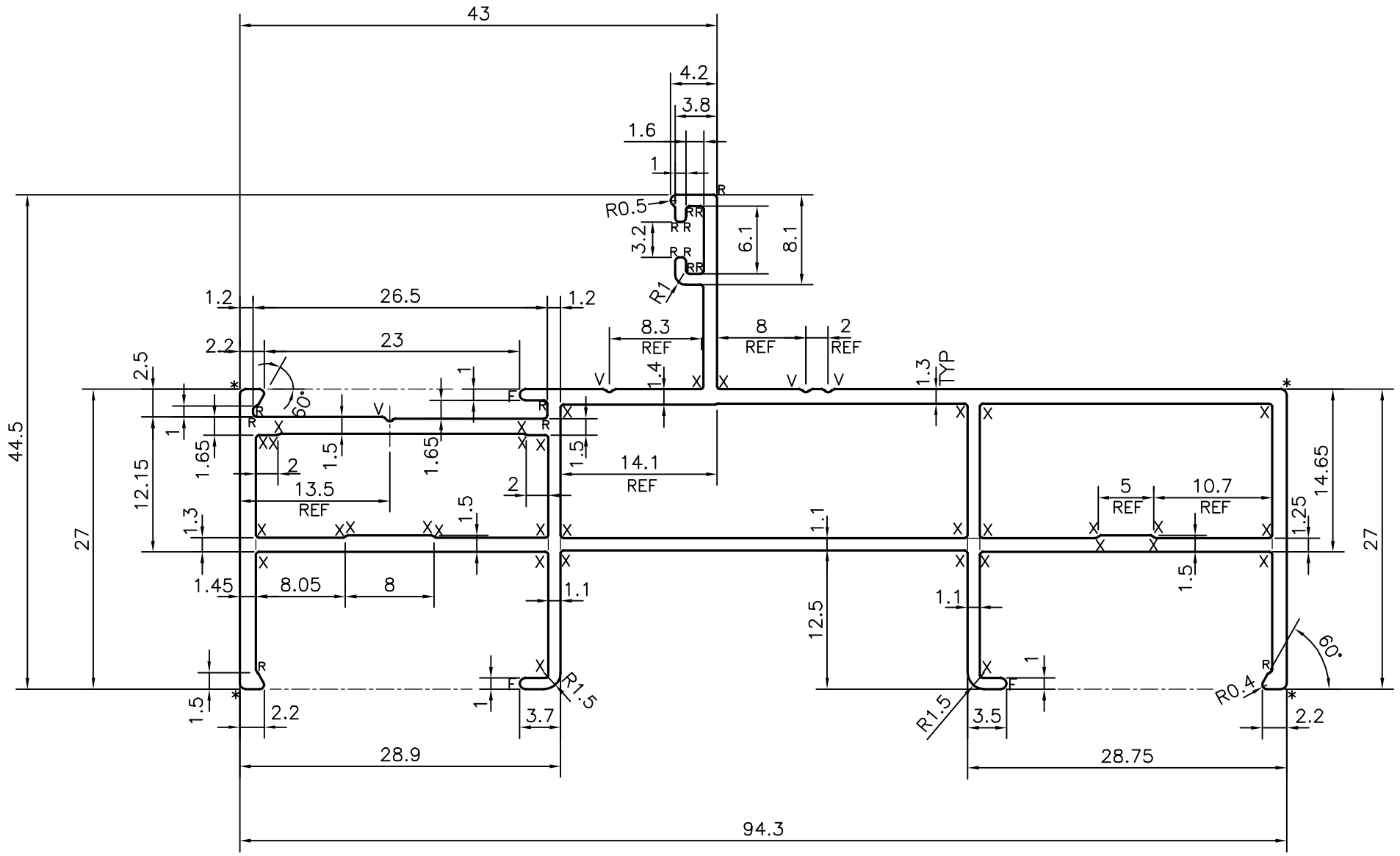

TOLERANCE CHART CD = CIRCUMSCRIBING CIRCLE

CD≤100	100<CD≤200	200<CD≤300	300<CD≤500
UPTO 10mm – ±0.25	±0.30	±0.35	±0.40
10.0 –25.0 – ±0.30	±0.40	±0.50	±0.60
25.0 –50.0 – ±0.50	±0.60	±0.80	±0.90
50.0 –100.0 – ±0.70	±0.90	±1.10	±1.30
100 – 150 – –	±1.10	±1.30	±1.50
150 – 200 – –	±1.3	±1.50	±1.80
200 – 300 – –	–	±1.70	±2.10
300 – 450 – –	–	–	±2.80

* = 0.50 RADIUS (4 PLACES)
x = 0.25 RADIUS (33 PLACES)
R = 0.30 RADIUS (15 PLACES)
V = V GROOVE 0.30x90° (4 PLACES)
F = FULL RADIUS (3 PLACES)

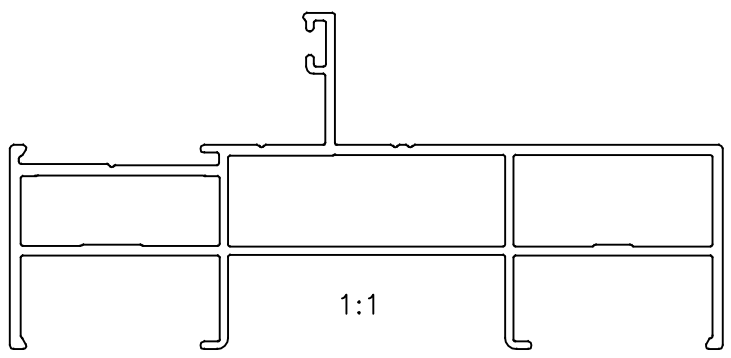

JINDAL
SYMBOL OF QUALITY
AN ISO 9001 COMPANY

JINDAL ALUMINIUM LTD.
BANGALORE–560073 (INDIA)

1. ALL DIMENSIONS ARE IN mm.
2. ROUND OFF ALL SHARP CORNERS WITH 0.40 mm.
3. TOLERANCES WILL BE AS PER BS:EN–755–9 , UNLESS OTHERWISE SPECIFIED

	NAME	DATE
DRAWN	J.P.KAUSHIK	15–05–2020
CHECKED		
APPROVED	B.NATARAJA	25–05–2020

SCALE	2:1
AREA mm^2	403.227
PERIMETER mm.	385.805
WEIGHT kg/m	1.089

DRAWING No.	SECTION No.
P–20952–1	–
X2654	X2654

PARTY'S NAME	PERFECT GLAZE, UNITED KINGDOM
PARTY'S DRAWING No.	TSF 94
ALLOY & TEMPER	6063 T6
DESCRIPTION	WINDOW SECTION