P-20950-1

X2666

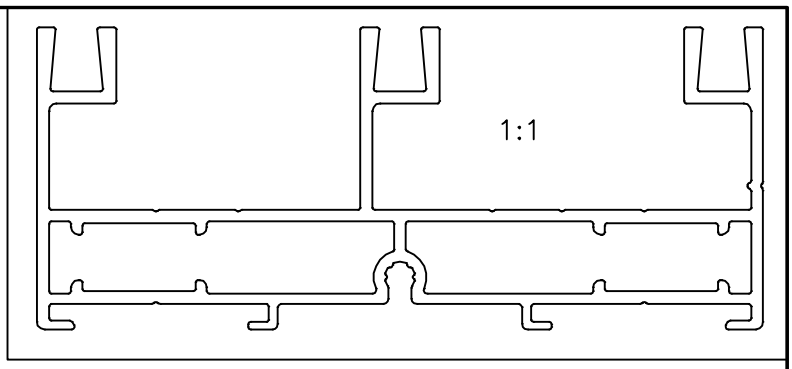

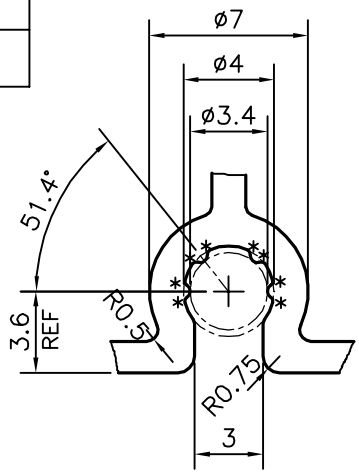

DETAIL OF "A"
SCALE 3:1

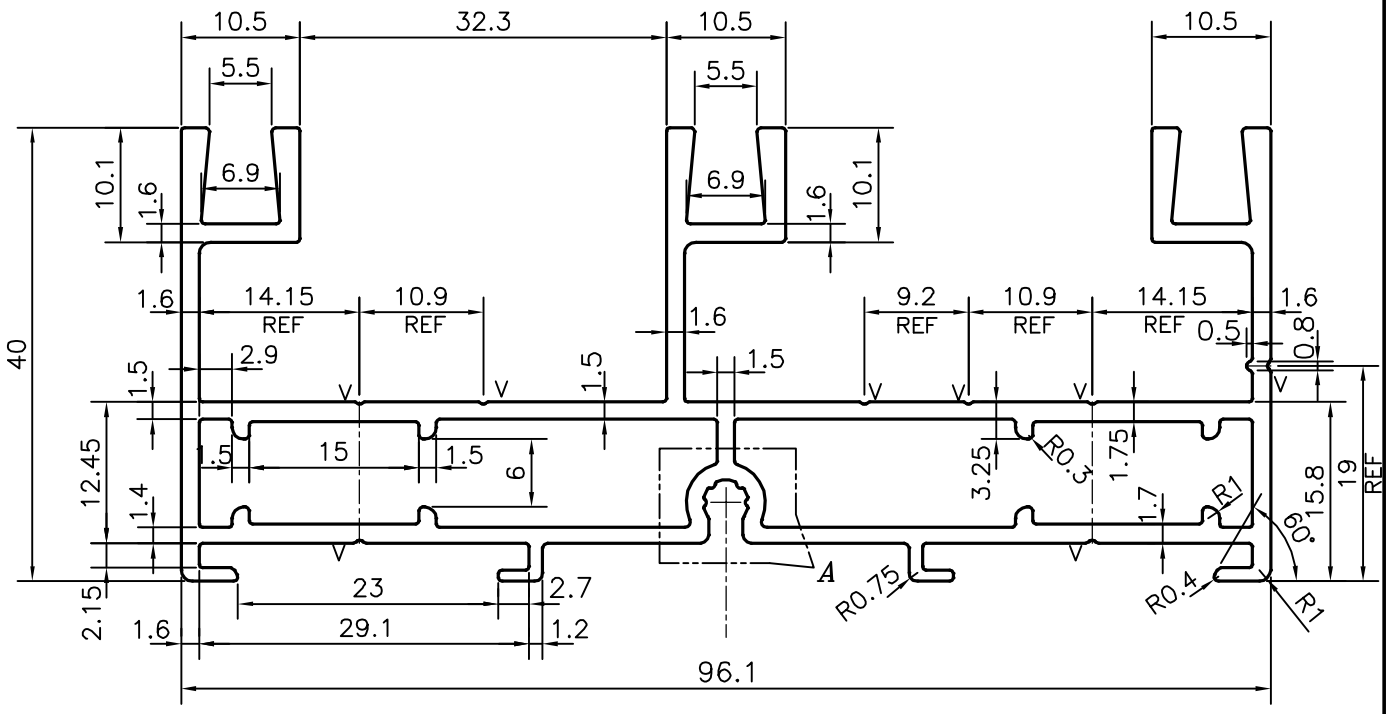

TOLERANCE CHART CD = CIRCUMSCRIBING CIRCLE

CD≤100	100<CD≤200	200<CD≤300	300<CD≤500
UPTO 10mm – ±0.25	±0.30	±0.35	±0.40
10.0 –25.0 – ±0.30	±0.40	±0.50	±0.60
25.0 –50.0 – ±0.50	±0.60	±0.80	±0.90
50.0 –100.0 – ±0.70	±0.90	±1.10	±1.30
100 – 150 – –	±1.10	±1.30	±1.50
150 – 200 – –	±1.3	±1.50	±1.80
200 – 300 – –	–	±1.70	±2.10
300 – 450 – –	–	–	±2.80

UNSPECIFIED RADIUS 0.30 mm
* = 0.20 RADIUS (8 PLACES)
V = V GROOVE 0.30x90° (8 PLACES)

JINDAL
SYMBOL OF QUALITY
AN ISO 9001 COMPANY

JINDAL ALUMINIUM LTD.

BANGALORE-560073 (INDIA)

	NAME	DATE
DRAWN	J.P.KAUSHIK	15-05-2020
CHECKED		
APPROVED	B.NATARAJA	26-05-2020

1. ALL DIMENSIONS ARE IN mm.
2. ROUND OFF ALL SHARP CORNERS WITH 0.40 mm.
3. TOLERANCES WILL BE AS PER BS:EN-755-9 , UNLESS OTHERWISE SPECIFIED

SCALE	1.5:1
AREA mm^2	626.897
PERIMETER mm.	525.741
WEIGHT kg/m	1.693

PARTY'S NAME	PERFECT GLAZE, UNITED KINGDOM
PARTY'S DRAWING No.	HS 300
ALLOY & TEMPER	6063 T6
DESCRIPTION	WINDOW SECTION

DRAWING No.	SECTION No.
P-20950-1	–
X2666	X2666