P–21085
X2679

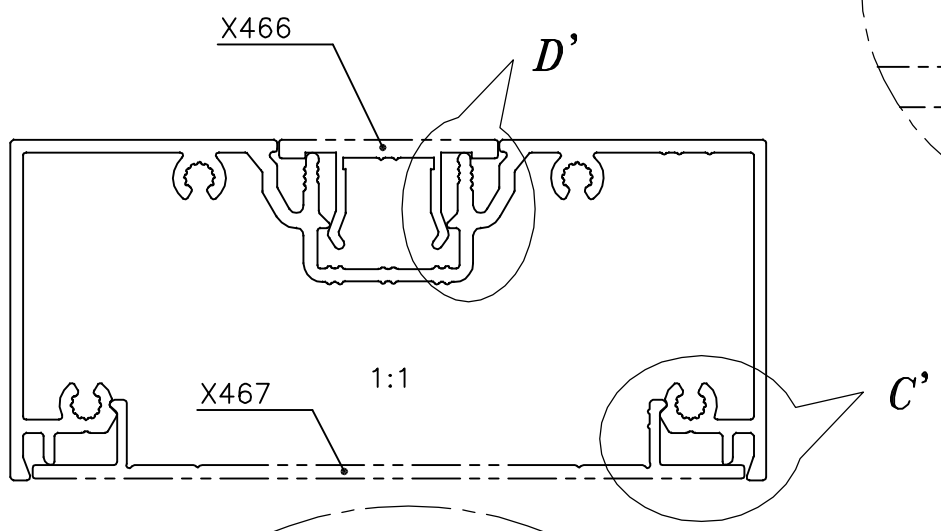

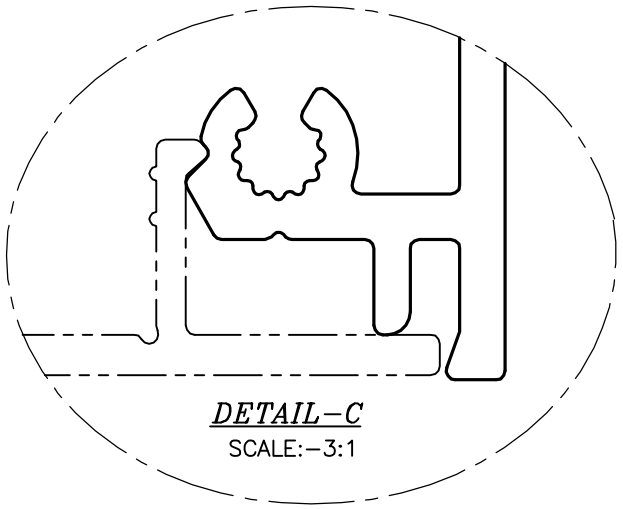

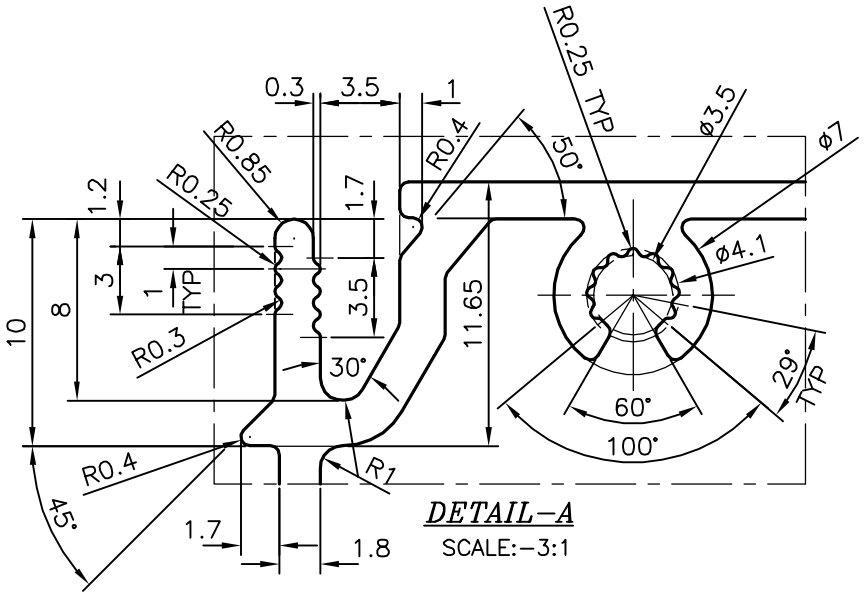

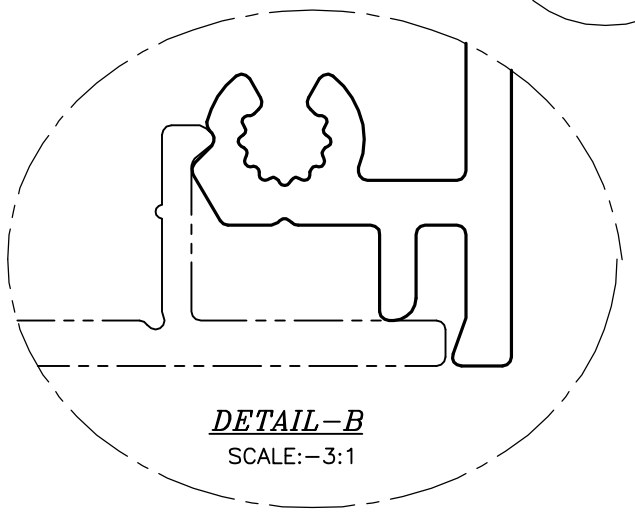

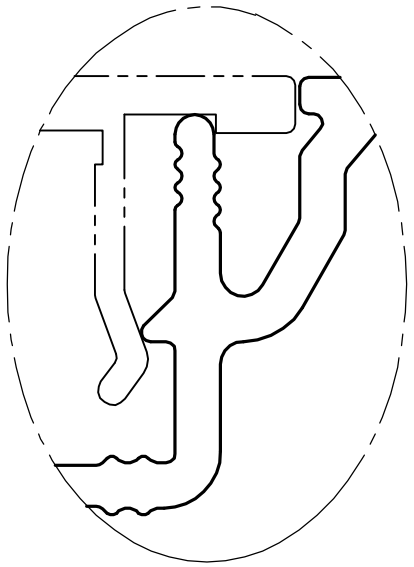

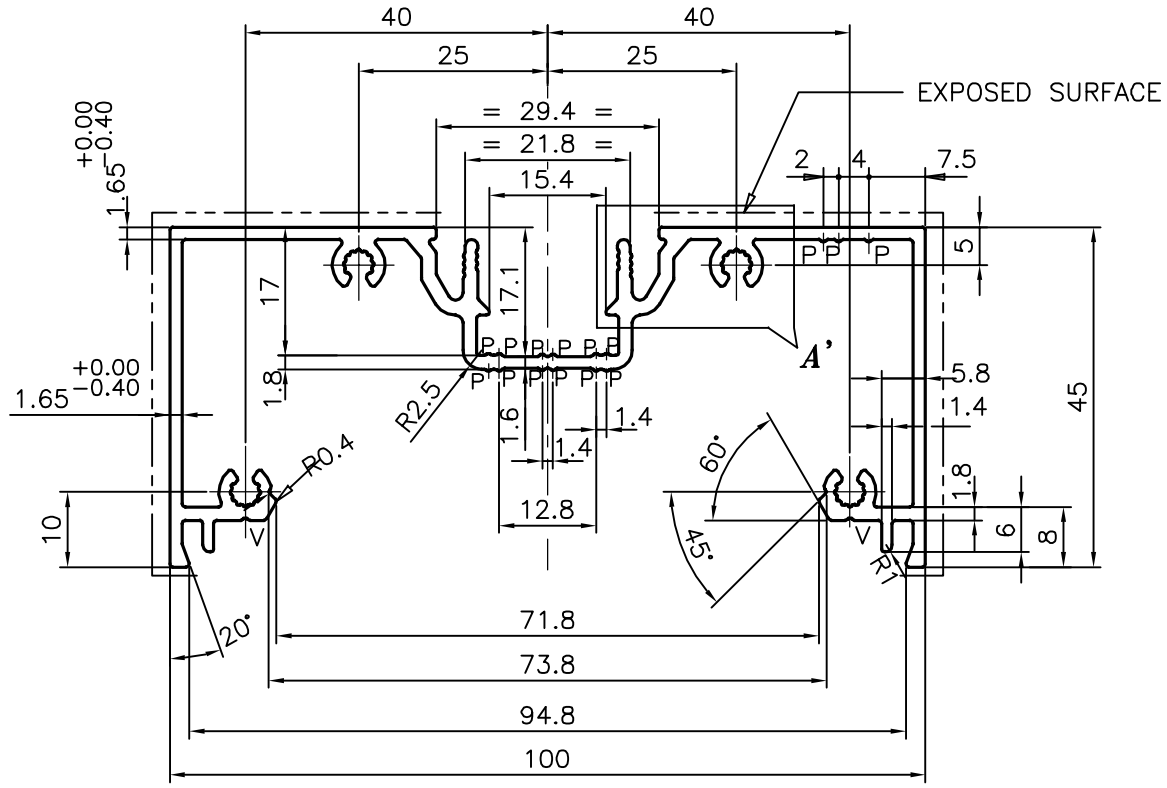

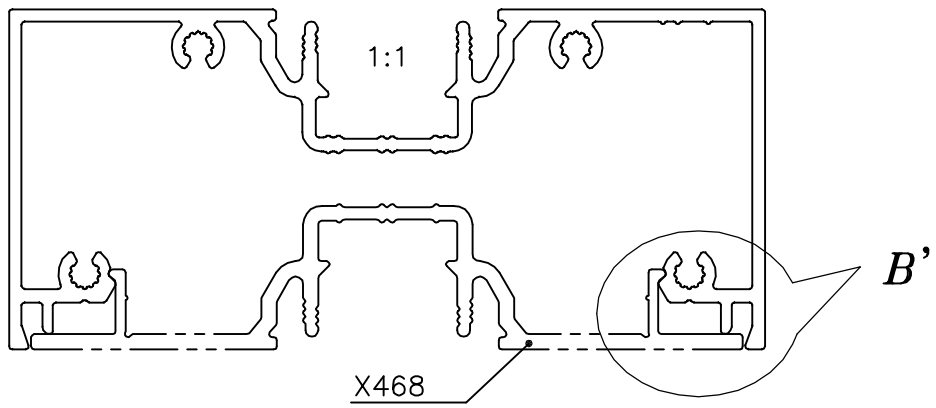

P = PIP 0.3x90°xR0.3 (14 PLACES)
V = VEE GROOVE 0.3x90°xR0.3 (2 PLACES)

MAXIMUM WEIGHT OF 6452 mm 9.500 Kg
MINIMUM WEIGHT OF 6452 mm 8.677 Kg
AS PER THICKNESS TOLERANCE

			NAME	DATE
SYMBOL OF QUALITY AN ISO 9001 COMPANY	JINDAL ALUMINIUM LTD. BANGALORE–560073 (INDIA)	DRAWN	J.P.KAUSHIK	17–06–2020
		CHECKED		
		APPROVED	B.NATARAJA	18–07–2020
1. ALL DIMENSIONS ARE IN mm. 2. ROUND OFF ALL SHARP CORNERS WITH 0.40 mm. 3. TOLERANCES WILL BE AS PER BS:EN–755–9 UNLESS OTHERWISE SPECIFIED		SCALE		1:1
		AREA mm²		544.063
		PERIMETER mm.		623.227
		WEIGHT kg/m		1.469
PARTY'S NAME	P D ALUMINIUM LTD., U.K	DRAWING No.		SECTION No.
PARTY'S DRAWING No.	LIGHTER OF X470 (PD 1 LIGHT)	P–21085		–
ALLOY & TEMPER	6063 T6	X2679		X2679
DESCRIPTION	MISC. SECTION			