P−21168
X2681

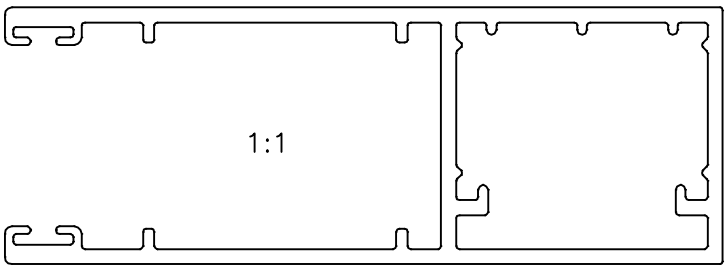

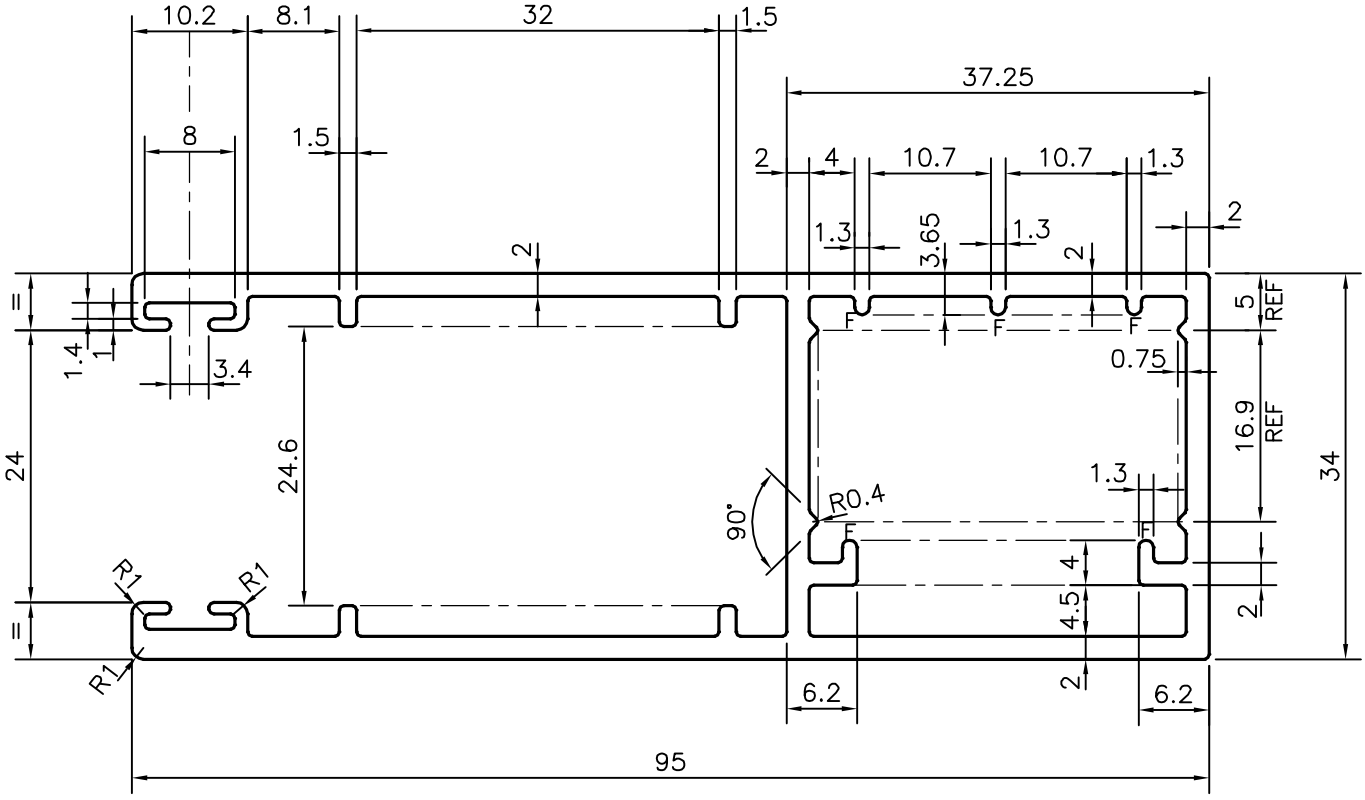

F = FULL RADIUS°(5 PLACES)
P = PIP 0.75x90°(4 PLACES)

			NAME	DATE
SYMBOL OF QUALITY AN ISO 9001 COMPANY	*JINDAL ALUMINIUM LTD.* *BANGALORE−560073 (INDIA)*	DRAWN	J.P.KAUSHIK	07−07−2020
		CHECKED		
		APPROVED	*B.NATARAJA*	18−07−2020

1. ALL DIMENSIONS ARE IN mm.
2. ROUND OFF ALL SHARP CORNERS WITH 0.40 mm.
3. TOLERANCES WILL BE AS PER BS:EN−755−9 UNLESS OTHERWISE SPECIFIED

SCALE	1.5:1
AREA mm^2	578.234
PERIMETER mm.	426.001
WEIGHT kg/m	1.561

PARTY'S NAME	PD ALUMINIUM LTD., UK
PARTY'S DRAWING No.	AS PER SAMPLE (PD −57)
ALLOY & TEMPER	6063 T6
DESCRIPTION	GUIDE RAIL SECTION

DRAWING No.	SECTION No.
P−21168	
X2681	X2681