P−21498−1
X2725

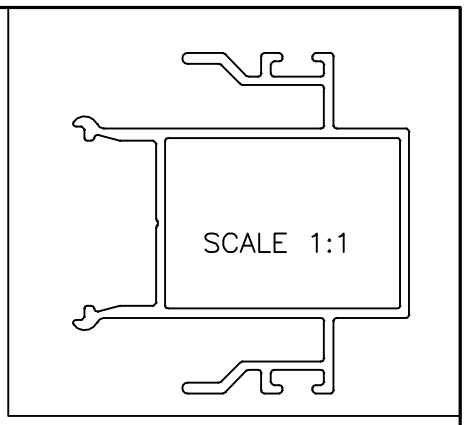

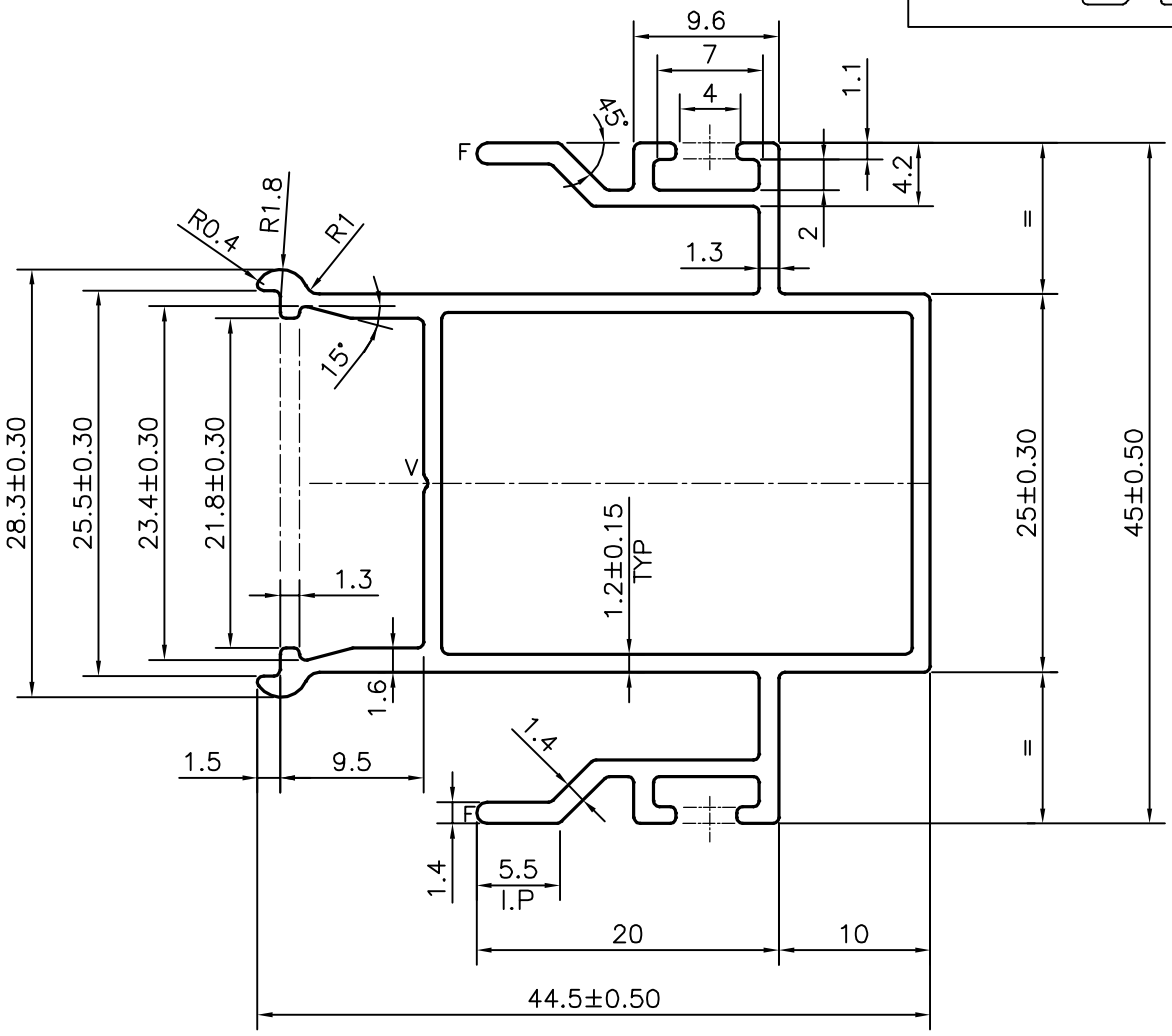

F = FULL RADIUS (2 PLACES)

V = V−GROOVE 0.3x90°(1 PLACE)

AVERAGE WEIGHT:−0.614 kg/m TO 0.813 kg/m

JINDAL SYMBOL OF QUALITY AN ISO 9001 COMPANY	*JINDAL ALUMINIUM LTD.* *BANGALORE−560073 (INDIA)*		NAME	DATE
		DRAWN	*J.P.KAUSHIK*	16−10−2020
		CHECKED		
		APPROVED	B.NATARAJA	09−11−2020

1. ALL DIMENSIONS ARE IN mm.
2. ROUND OFF ALL SHARP CORNERS WITH 0.40 mm.
3. TOLERANCES WILL BE AS PER BS:EN−755−9, UNLESS OTHERWISE SPECIFIED

SCALE	2:1
AREA mm^2	259.963
PERIMETER mm.	302.609
WEIGHT kg/m	0.702

PARTY'S NAME	PRAYOSHA ENTERPRISES LTD., UGANDA
PARTY'S DRAWING No.	MODIFIED OF 21437
ALLOY & TEMPER	6063 T6
DESCRIPTION	WINDOW SECTION (DOUBLE SIDE INTERLOCK)

DRAWING No.	SECTION No.
P−21498−1	−
X2725	X2725