P−21540
X2744

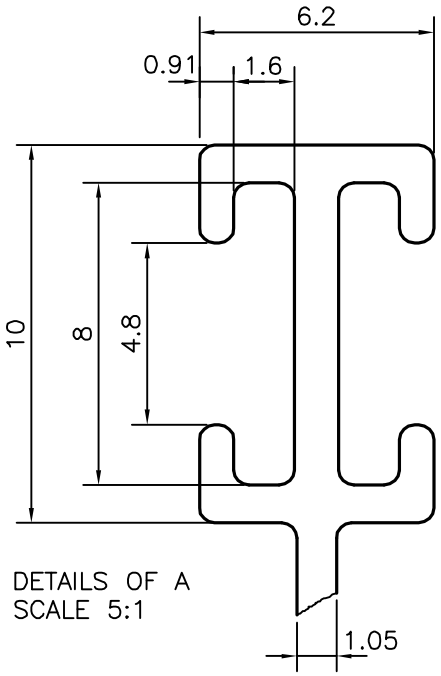

DETAILS OF A
SCALE 5:1

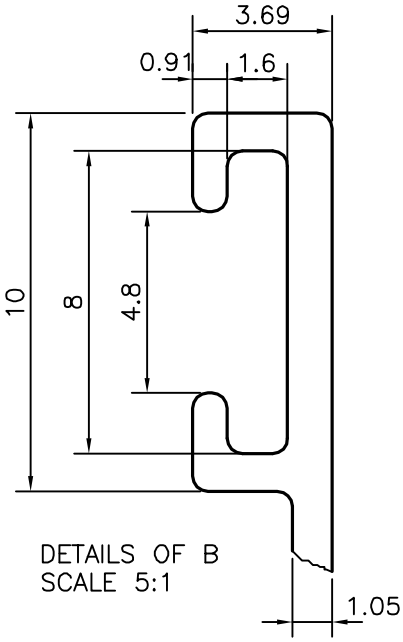

DETAILS OF B
SCALE 5:1

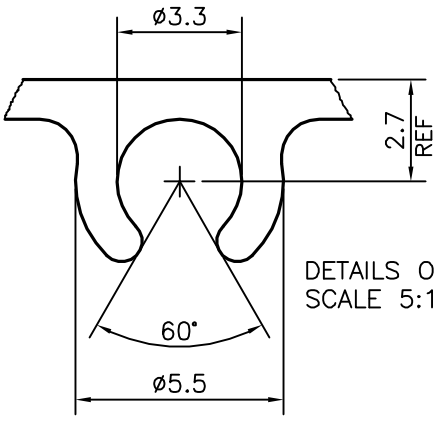

DETAILS OF C
SCALE 5:1

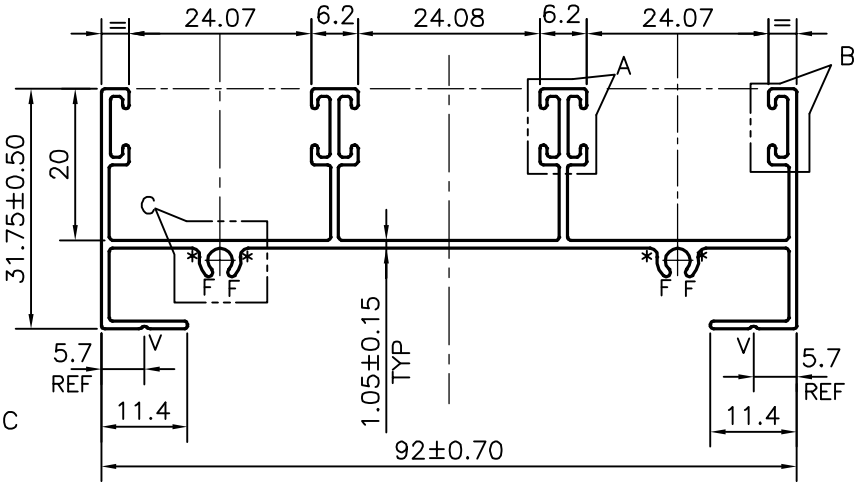

F = FULL RADIUS (4 PLACES)
* = 1.0 RADIUS (4 PLACES)
V = V GROOVE 0.4x90° (2 PLACES)

AVERAGE WEIGHT:−0.721 kg/m TO 0.881 kg/m

JINDAL SYMBOL OF QUALITY AN ISO 9001 COMPANY	*JINDAL ALUMINIUM LTD.* *BANGALORE−560073 (INDIA)*		NAME	DATE
		DRAWN	*J.P.KAUSHIK*	22−09−2020
		CHECKED		
		APPROVED	B.NATARAJA	10−11−2020
1. ALL DIMENSIONS ARE IN mm. 2. ROUND OFF ALL SHARP CORNERS WITH 0.40 mm. 3. TOLERANCES WILL BE AS PER BS:EN−755−9, UNLESS OTHERWISE SPECIFIED		SCALE		1:1
		AREA mm^2		296.632
		PERIMETER mm.		541.47
PARTY'S NAME	PRAYOSHA ENTERPRISES LTD., UGANDA	WEIGHT kg/m		0.801
		DRAWING No.		SECTION No.
PARTY'S DRAWING No.	MODIFIED OF 21431	P−21540		−
		X2744		X2744
ALLOY & TEMPER	6063 T6			
DESCRIPTION	WINDOW SECTION (TOP & SIDE−3 TRACK)			