P−21592−2
X2751

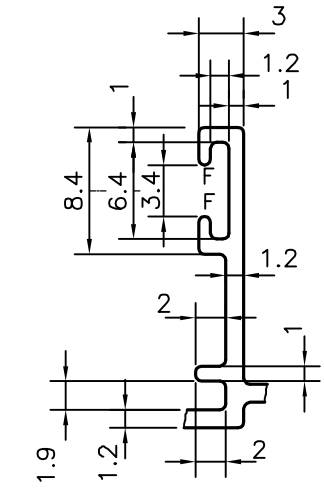

DETAIL OF A
SCALE 2:1

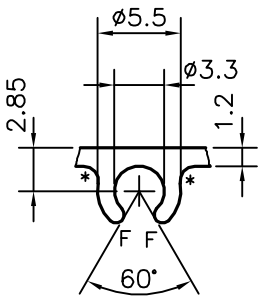

DETAIL OF B
SCALE 2:1

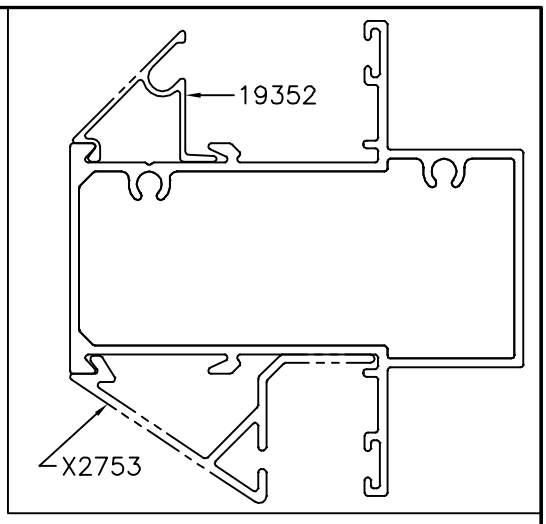

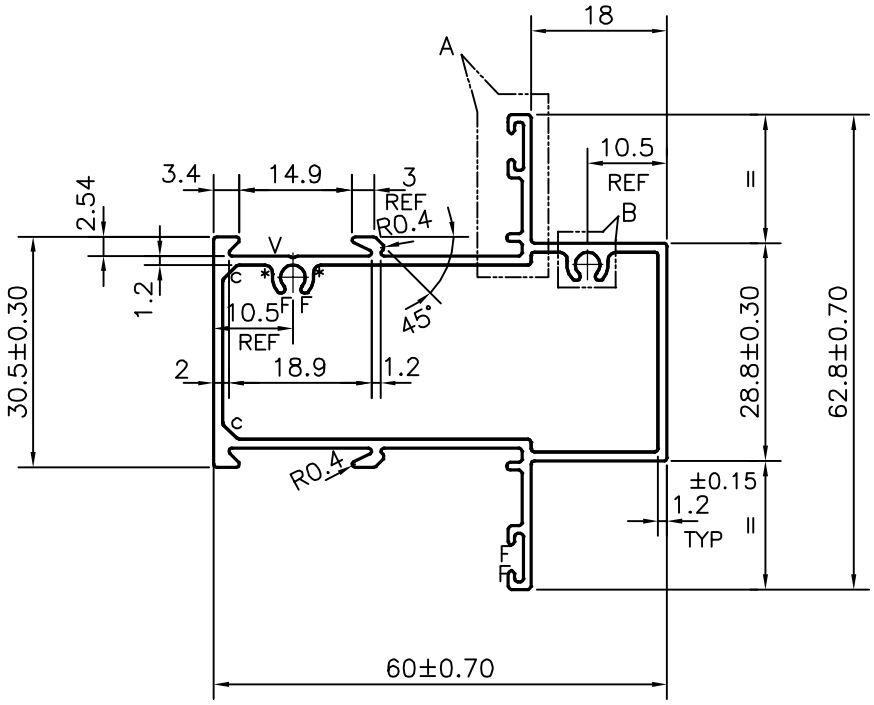

c = CHAMFER 2x45° (2 PLACES)
* = 1.0 RADIUS (4 PLACES)
F = FULL RADIUS (8 PLACES)
V = V GROOVE 0.3x90° (1 PLACE)

AVERAGE WEIGHT:−0.735 kg/m TO 0.946 kg/m

			NAME	DATE
JINDAL SYMBOL OF QUALITY AN ISO 9001 COMPANY	*JINDAL ALUMINIUM LTD.* *BANGALORE−560073 (INDIA)*	DRAWN	J.P.KAUSHIK	31−10−2020
		CHECKED		
		APPROVED	B.NATARAJA	10−11−2020

1. ALL DIMENSIONS ARE IN mm.
2. ROUND OFF ALL SHARP CORNERS WITH 0.40 mm.
3. TOLERANCES WILL BE AS PER BS:EN−755−9 UNLESS OTHERWISE SPECIFIED

SCALE	1:1
AREA mm^2	311.649
PERIMETER mm.	304.602
WEIGHT kg/m	0.841

PARTY'S NAME	PRAYOSHA ENTERPRISES LTD., UGANDA
PARTY'S DRAWING No.	MODIFIED OF 21323
ALLOY & TEMPER	6063 T6
DESCRIPTION	WINDOW SECTION

DRAWING No.	SECTION No.
P−21592−2	−
X2751	X2751