P–21814
X2770

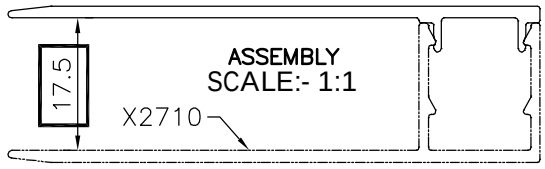

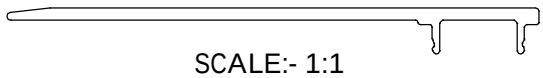

SCALE:- 1:1

☐ *MARKED DIMENSIONS ARE CRITICAL*

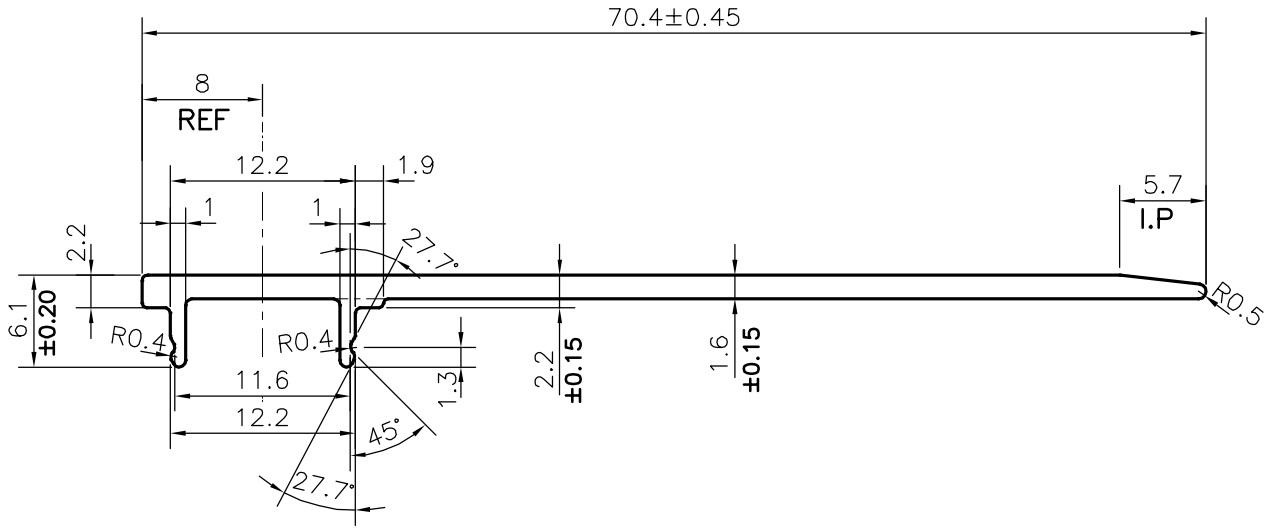

*APPROXIMATE WEIGHT RANGE –**0.295 – 0.361 kg/m***

1. TWIST=1.7mm/M
2. ANGULARITY TOLERANCE= ±2°
3. GENERAL TOLERANCE= ±0.50

			NAME	DATE
JINDAL SYMBOL OF QUALITY AN ISO 9001 COMPANY	*JINDAL ALUMINIUM LTD.* *BANGALORE–560073 (INDIA)*	DRAWN	DARPAN	30–11–2020
		CHECKED		
		APPROVED	B.NATARAJA	08–12–2020

1. ALL DIMENSIONS ARE IN mm.
2. ROUND OFF ALL SHARP CORNERS WITH 0.40 mm.
3. TOLERANCES WILL BE AS PER **AS/NZS:1866–1997**, UNLESS OTHERWISE SPECIFIED

SCALE	2:1
AREA mm^2	121.318
PERIMETER mm.	159.219
WEIGHT kg/m	0.328

		DRAWING No.	SECTION No.
PARTY'S NAME	LINK POWDER COATING GROUP PTY. LTD., AUSTRALIA		
PARTY'S DRAWING No.	LDD CLAD DECK STARTER M TOP / MODIFIED OF X2711	P–21814	–
ALLOY & TEMPER	6060 T6	X2770	X2770
DESCRIPTION	CLADDING SECTION		