P–5987
X464

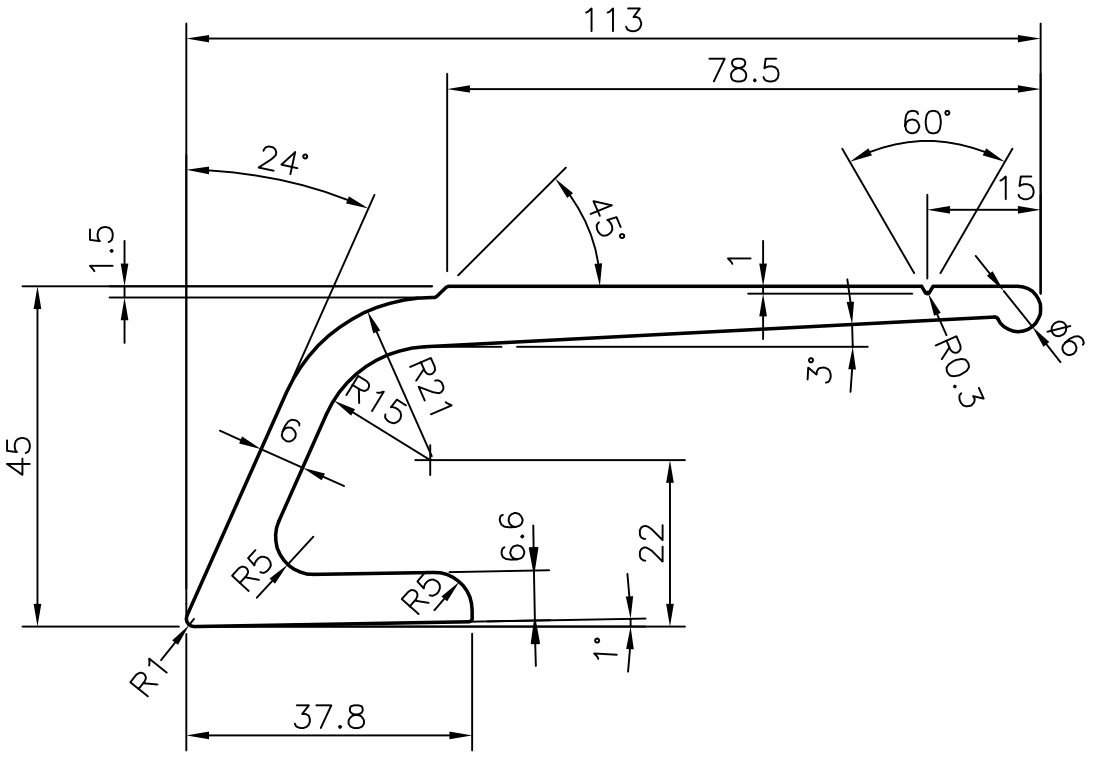

JINDAL SYMBOL OF QUALITY AN ISO 9001 COMPANY	*JINDAL ALUMINIUM LTD.* *BANGALORE–560073 (INDIA)*		NAME	DATE
		DRAWN	J.P.KAUSHIK	03–12–2005
		CHECKED		
		APPROVED		
1. ALL DIMENSIONS ARE IN mm. 2. ROUND OFF ALL SHARP CORNERS WITH 0.40 mm. 3. TOLERANCES WILL BE AS PER BS:1474–1987 UNLESS OTHERWISE SPECIFIED		SCALE		1:1
		AREA mm^2		1008.386
		PERIMETER mm.		330.655
PARTY'S NAME	J. CAPITAL SHOPFRONT LTD., U.K.	WEIGHT kg/m		2.723
		DRAWING No.		SECTION No.
PARTY'S DRAWING No.	AS PER SAMPLE (GS–37)	P–5987		–
		X464		X464
ALLOY & TEMPER	6063 T6			
DESCRIPTION	HANDLE SECTION			